OPERATION & MAINTENANCE MANUAL

Cinderstone Mine Winding Engine & Ore Conveyor.

SAMPLE DOCUMENT · FICTITIOUS PROJECT · NOT A LIVE RECORD

KM4120-HOB-TEC-O&M-SHW-04-CIN-00001 · Rev 02

PROJECT
Cinderstone Mine — themed walkthrough attraction

CLIENT
Marlhollow Leisure Ltd

ISSUE STATUS
Status A — Approved. Issued at practical completion

PREPARED BY
Hobfolk — Compliance desk

VENUE
Kettlemoor Park, Area 04

ELEMENTS COVERED
CIN-APR-04001, CIN-APR-04002, CIN-SFX-04003

DATE OF ISSUE
3 September 2026

CONTENT STANDARD
HSG175 (3rd ed. 2017) Appendix 3

SECTION 0.1

Document control

A handover pack that cannot prove which version it is, who approved it and what changed is not a controlled document — it is a folder.

DOCUMENT NUMBER	KM4120-HOB-TEC-O&M-SHW-04-CIN-00001	REVISION	02
TITLE	Operation & Maintenance Manual — Winding Engine, Ore Conveyor and Steam Effect, Area 04	VOLUME	1 of 1
REASON FOR ISSUE	Issue at practical completion. Supersedes Rev 01 in full.	STATUS	A — APPROVED
CONTRACT REFERENCE	KM4120 / Package SHW-04 / Clause 14.7 (as-built and O&M documentation)	SECURITY	Client confidential
COMPLIANCE STATEMENT	Prepared to the content requirements of HSG175 (3rd edition, 2017) Appendix 3 and to the information requirements of regulation 12 of CDM 2015. Section 1.3 records which regimes were determined to apply and which were considered and excluded.	RETENTION	Life of asset

0.1.1 Issue sheet

PREPARED	CHECKED	REVIEWED	APPROVED
Hobfolk Compliance desk	**A. Pellowe**	**D. Marchetti**	**S. Ardley**
Document author	Project engineer, Hobfolk	Consultant — M&E	Client, Head of Operations
Hobfolk	*A.Pellowe*	*D.Marchetti*	*S.Ardley*
03/09/26	03/09/26	03/09/26	03/09/26

0.1.2 Status code legend

CODE	MEANING	EFFECT ON THE WORKS · SAMPLE
A	Approved	Document is issued for use. No further submission required.
B	Approved with comments	Work may proceed. Comments to be incorporated at next revision.
BR	Approved with comments — resubmit	Work may proceed. Revised document required within the stated period.
C	Revise and resubmit	Document is not accepted. Work dependent on it is held.
D	Not approved	Rejected. Re-issue as a new submission.

0.1.3 Revision history

REV	DATE	DESCRIPTION	STATUS	APPROVED · SAMPLE
00	14/05/26	First issue for review. Sections 1–4 and 7 only; commissioning records not yet available.	C	—
01	22/07/26	Commissioning and test records added (§5). Inspection regime added (§6). Issued for review against OCS-04-118.	BR	D. Marchetti
02	03/09/26	All ten comments on OCS-04-118 closed — see §0.2. Asset register extended to the fields required by the client CAFM import. Obsolescence and decommissioning added	A	S. Ardley

REV	DATE	DESCRIPTION	STATUS	APPROVED · SAMPLE
		(§11). Issued at practical completion.		

0.1.4 Distribution

HOLDER	COPY	PURPOSE · SAMPLE
Client — Head of Operations	Controlled, digital	Master. All revisions issued to this holder first.
Venue maintenance office, Area 04	Controlled, printed	Working copy at the element. Superseded copies withdrawn on issue.
Principal designer	Controlled, digital	Incorporation into the health and safety file (CDM 2015 reg 12).
Consultant — M&E	Controlled, digital	Review and status.
Insurer's engineering surveyor	Uncontrolled extract	§5 and §6 only, on request.

> **Uncontrolled copies.** Any print of this document not carrying the Area 04 maintenance office stamp is uncontrolled and must not be used to plan work. The revision in force is the one recorded in the client's document register, not the one in the folder.

SECTION 0.2

Observation and comment sheet — closed out

Rev 01 came back with ten comments. This is the record of every one of them and how it was closed. A pack that has never been sent back has usually never been read.

#	SOURCE	OBSERVATION	CODE	CLOSE-OUT AT REV 02	STATE · SAMPLE
1	General	Approved as-built system drawings to be included, not referenced.	C	Drawing register at §2.4; the six as-built sheets bound at Appendix A.	CLOSED
2	General	Testing and commissioning reports to be attached as per manufacturer recommendation and approved method statement.	C	§5 added in full: insulation resistance, earth continuity, RCD, interlock proving, functional endurance, davit load test.	CLOSED
3	General	Training schedule for operating and maintenance staff to be provided.	C	Competence and training requirement at §10.3, with the four roles and what each may and may not do.	CLOSED
4	Asset register	Register to follow the approved template: make, model, serial, description, location, quantity, warranty start.	BR	§2.3 rebuilt to the client CAFM import template. Serials transcribed from the installed units, not from the order.	CLOSED
5	Warranties	Original signed and stamped warranties required from both manufacturer and vendor. Warranty period to run from take-over certificate.	BR	§11.1 warranty register; start date stated as the take-over date, not the delivery date. Originals at Appendix D.	CLOSED
6	Preventive maintenance	Torque values to be stated in the maintenance instructions, not left to the fitter.	BR	Torque schedule at §7.4, by fastener and by joint, with the re-check interval.	CLOSED
7	Maintenance	Local supplier contact required for the coating system, not the overseas manufacturer only.	B	§11.2 names the distributor holding stock, with lead time and minimum order.	CLOSED
8	Health & safety	Safety data sheets for all coatings and the water treatment product to be included.	B	Safety data sheets at Appendix C; the substances summarised in the §10.1 residual-risk register.	CLOSED
9	Emergency	Emergency contact details to be in the manual, not in a separate document.	B	§9.1 escalation table, in the manual, with the out-of-hours route stated.	CLOSED
10	General	Corrective action procedure to be attached — what happens when a check fails.	C	§6.3 sets the fail response for every inspection line, including who may authorise a return to service.	CLOSED

RAISED BY	ACTIONED BY	VERIFIED CLOSED	ACCEPTED
D. Marchetti Consultant — M&E OCS-04-118 · 05/08/26	**Hobfolk Compliance desk** Document author 03/09/26	**D. Marchetti** Consultant — M&E *D.Marchetti*	**S. Ardley** Client, Head of Operations *S.Ardley*

Why this page is in the sample at all. Comments 2, 3 and 10 are the three that most often go unanswered, and each one is the difference between a manual and a description. A pack without commissioning evidence cannot show the thing ever worked; without a training requirement it cannot say who is allowed to touch it; without a corrective-action route a failed check has nowhere to go.

SECTION 0.3

Contents

Numbered so that an engineer standing in front of the element at 07:40 finds the right page before the park opens, without reading anything else.

0	**Document control**
0.1	Document control, issue sheet, revisions, distribution
0.2	Observation and comment sheet — closed out
0.3	Contents
1	**Scope and applicable regime**
1.1	Scope of this manual, and what it excludes
1.2	Reference documents
1.3	**Applicability determination** — what applies, what does not, why
2	**The installation**
2.1	Project directory and escalation
2.2	Description and control philosophy
2.3	Asset register
2.4	As-built drawing register and recorded deviations
3	**Operation**
3.1	Start-up and shutdown
3.2	Normal operating parameters
3.3	Fault conditions and first response
5	**Commissioning and test records**
5.1	Electrical installation test results
5.2	Interlock and emergency-stop proving
5.3	Functional endurance and effect commissioning
5.4	Lifting equipment load test
6	**Inspection regime**
6.1	Statutory examinations
6.2	Duty-holder inspections
6.3	Corrective action and return to service
7	**Maintenance**
7.1–7.4	Planned schedule, lubrication, wear parts, torque
8	**Services and utilities**
8.1–8.6	Electrical load, supply, ingress protection, water, drainage, legionella
9	**Emergency procedures**
9.1–9.4	Escalation, stalled element, manual release, venue interface
10	**Health, safety and competence**
10.1–10.3	Residual risk, safe isolation, who may do what
11	**Spares, obsolescence and end of life**
11.1–11.4	Warranty, spares, obsolescence, decommissioning
A	**As-built drawing set — six sheets**
B	**Certificates and test records**
C	**Safety data sheets**
D	**Warranties and guarantees**
E	**Coating technical data**
F	**Health and safety signage**

Section 4 is deliberately absent. It was the ride-operator section in the venue's standard numbering, and this element carries no passengers, so there is nothing to put in it. The number is held rather than reused, because renumbering a pack after issue breaks every cross-reference in the client's permit system.

SECTION 1.1

Scope, exclusions and reference documents

1.1 What this manual covers

Three show elements in Area 04 of Cinderstone Mine, a walkthrough themed attraction at Kettlemoor Park: the winding engine (CIN-APR-04001), the ore conveyor (CIN-APR-04002) and the steam effect serving both (CIN-SFX-04003). It covers their operation, planned maintenance, inspection, residual risk, spares and end of life, together with the fixed electrical and water services from the local isolator and stopcock onward.

1.1.1 Excluded, and where it lives instead

EXCLUDED FROM THIS MANUAL	HELD BY	DOCUMENT · SAMPLE
Distribution board and upstream supply	Venue M&E	KM4120-MEP-OM-04-00007
Guest walkway, handrail and barrier	Main contractor	KM4120-ARC-OM-04-00002
Fire detection and alarm	Venue life safety	KM4120-FLS-OM-00-00001
Show lighting and audio	AV subcontractor	KM4120-AVL-OM-04-00004
Cold water supply upstream of the stopcock	Venue M&E	KM4120-MEP-OM-00-00011

> **Read the exclusions before the contents.** Most handover disputes are not about what a pack said — they are about a boundary two parties each assumed the other had covered. The table above is the boundary, in writing, agreed at Rev 01.

1.2 Reference documents

REFERENCE	TITLE · SAMPLE
KM4120-SPC-GEN-00-00001	Employer's requirements — general
KM4120-SPC-GEN-00-00004	Employer's requirements — metalwork and fabrication
KM4120-SPC-GEN-00-00008	Employer's requirements — finishes and scenic coatings
KM4120-HOB-TEC-MST-04-CIN-00003	Installation method statement and RAMS, Area 04
KM4120-HOB-TEC-ITP-04-CIN-00004	Inspection and test plan, Area 04
MLL-OPS-SOP-014	Client standing operating procedure — show element daily checks

SECTION 1.3

Applicability determination

Which regimes govern this element, which do not, and the reason in each case. The exclusions are stated as deliberately as the inclusions, because an unstated exclusion reads as an omission.

REGIME	APPLIES	DETERMINATION AND WHERE IT IS DISCHARGED · SAMPLE
CDM 2015 SI 2015/51, reg 12	YES	Construction work at a commercial premises. This manual is the show-element contribution to the health and safety file; the principal designer collates it and passes the file to the client at the end of the project. What a future project actually needs is §10.1 (residual risk), §10.2 (isolation) and §11.4 (dismantling) — all three written for somebody who has never seen this element.
PUWER 1998	YES	The element is work equipment for the people who maintain it, whatever it is to a guest. Inspection regime at §6.2; the inspection record is the evidence.
HSG175 (3rd ed., 2017) Appendix 3	AS CONTENT STANDARD	The venue runs its whole attraction estate to HSG175, so this pack follows Appendix 3's content requirements — safe use, loading and limitations, fault-finding, emergency procedures, maintenance and inspection — and drops into the existing system without translation. Adopted by choice, not by duty: see the next row.
BS EN 13814-2:2019 +A1:2024 Amusement rides and devices — operation, maintenance and use	NO	**Considered and excluded on scope.** The element carries no passengers and imparts motion to no person; guests view it from a fixed walkway behind a barrier at 2.4 m and there is no guest-accessible moving part. It is a static-position animated show element, not an amusement device. **This determination is conditional.** If the element is ever modified so that a person is carried, moved or supported by it — including a photo platform or a viewing car — the exclusion falls and the whole of BS EN 13814 applies from that moment. See §11.3.
ADIPS registration and Declaration of Operational Compliance	NO	Follows from the row above. The element is not an amusement device, is not registered under the scheme, and **no Declaration of Operational Compliance exists for it or is required.** It is stated here in the negative so that nobody downstream reports one as missing, or represents the element as holding one.
LOLER 1998	IN PART	Not the show mechanism — it lifts no load and no person. Applies to the maintenance davit CIN-LFT-04051 and its accessories only: 12-month thorough examination for the davit, **6-month for the sling and shackle**, which is the interval most often got wrong. First examination and load test at §5.4.
BS 7671:2018 IET Wiring Regulations, 18th ed.	YES	The fixed installation was designed, installed and certified to **BS 7671:2018+A3:2024**, which was the edition in force on the date of test (§5.1). **BS 7671:2018+A4:2026 was published in April 2026 and A3:2024 is withdrawn on 15 October 2026**, so both are current at the date of this issue. Nothing about the installation changes on that date; the next periodic inspection is to be carried out and reported against whichever edition is current when it falls due, and the certificate at Appendix B states its own edition on its face.
BS EN ISO 13849-1:2023	YES	The gate interlock and emergency-stop circuit is a safety-related part of a control system. Assessed and validated at **Category 3, PL d**. Validation record at §5.2. Any change to the circuit, including a like-for-like switch of a different make, invalidates that assessment until it is re-done.
BS EN 13501-1:2018	YES	Reaction-to-fire classification of the scenic facing materials in the guest envelope. Classifications and evidence at §8.5. Repairs must use the same classified system — §7.5, which is where this gets lost three years later.
ACOP L8 and HSG274 Part 3	YES	The steam effect atomises water into a respirable aerosol in a space occupied by the public, which places it in the "other risk systems" part of the guidance rather than the hot-and-cold-water part. Written scheme, control measures and monitoring at §8.6.

SECTION 2.1

Project directory and escalation

ROLE	ORGANISATION	CONTACT	WHEN TO USE IT · SAMPLE
Duty technician, Area 04	Marlhollow Leisure Ltd	Ext 4104	First call for anything, at any hour the park is open.
Area 04 maintenance office	Marlhollow Leisure Ltd	Ext 4100	Planned work, permits, isolation authorisation.
Head of Operations	Marlhollow Leisure Ltd	Ext 4001	Return to service after a failed statutory check (§6.3).
Element manufacturer — UK	Hobfolk, Compliance desk	Business hours	Technical queries on the element, spares, drawings, warranty.
Controls contractor	Sedgewray Controls Ltd	24 h call-out	Anything inside the control panel. Nobody else opens it.
Coating distributor	Halverton Coatings (Midlands)	Business hours	Stocked touch-up materials — see §11.2.

> **Out of hours.** The venue duty manager holds the call-out list. This element has no 24-hour manufacturer line and does not need one: nothing on it is recoverable at 02:00 that is not equally recoverable at 08:00, and §9.2 says so in terms so nobody attempts it alone in the dark.

SECTION 2.2

Description and control philosophy

2.2.1 What it is

The winding engine is a non-rideable animated show element representing a Victorian pit-head winder. It runs a continuous 90-second cycle: the drum rotates through 2.5 turns, the counterweighted beam rocks through 24°, and the steam effect discharges twice per cycle. The ore conveyor is a 6.2 m inclined belt carrying twelve fixed dummy ore skips at 0.18 m/s, driven independently and synchronised to the winder cycle by the same controller. Guests view both from a fixed walkway at 2.4 m, behind a 1.1 m barrier.

COMPONENT	FUNCTION	REFERENCE · SAMPLE
Drive unit, winder	Geared motor, 1.5 kW, 400 V 3-ph, driving the winding drum through a 1:38 chain reduction	CIN-MEC-04011
Winding drum	Fabricated steel drum, timber-clad, carrying the decorative rope. Rope is dressed, not loaded.	CIN-MEC-04012
Rocking beam	Counterweighted beam on a trunnion bearing, driven by an eccentric off the drum shaft	CIN-MEC-04013
Conveyor drive	Geared motor, 0.55 kW, 400 V 3-ph, head-end drive, fixed speed	CIN-MEC-04014
Steam effect	Ultrasonic atomiser with heated element and 45 l reservoir; discharges through two nozzles	CIN-SFX-04021
Control panel	PLC, local HMI, maintenance isolator, three gate interlocks, two e-stops	CIN-ELE-04031
Maintenance davit	Socketed davit at the drum housing, SWL 250 kg, with sling and shackle	CIN-LFT-04051

2.2.2 Control philosophy

The element runs unattended on a timed cycle during operating hours. It will not start unless all three access gates are closed and the maintenance isolator is in RUN. Loss of any interlock removes power to both drives within 0.4 s and closes the steam solenoid.

It does not restart automatically after an interlock trip. A deliberate reset at the local HMI is required, the reset is logged with a timestamp, and the log is not clearable from the HMI. That is intentional: an element that quietly resets itself hides the fault that caused the trip, and the third trip is the one that matters.

SAFETY FUNCTION	ARCHITECTURE	RATING	RESPONSE · SAMPLE
Gate interlock × 3	Dual channel, monitored	Cat 3, PL d	Both drives de-energised, steam solenoid closed, ≤ 0.4 s
Emergency stop × 2	Dual channel, monitored	Cat 3, PL d	As above, plus latched until manual reset
Fire alarm interface	Single channel, fail-safe	–	Loss of the venue's healthy contact stops the element. Fail-safe: a cut cable stops it.

SAFETY FUNCTION	ARCHITECTURE	RATING	RESPONSE · SAMPLE
Reservoir low level	Float switch	–	Steam effect inhibited only. Motion continues; show degrades rather than stopping.

SECTION 2.3

Asset register

To the client's CAFM import template. Serial numbers transcribed from the units as installed, not from the purchase order — two of them did not match, which is the whole reason this column is checked on site.

ASSET ID	DESCRIPTION	MAKE	MODEL	SERIAL	QTY	LOCATION	WARRANTY START	TERM · SAMPLE
CIN-MEC-04011	Geared motor, winder drive	Trellworth	GM90-1.5-38	TW-249117	1	Plant void 04-P1	18/08/26	24 mo
CIN-MEC-04012	Winding drum assembly	Hobfolk	CIN-DRM-01	HF-04-0112	1	Head frame	18/08/26	12 mo
CIN-MEC-04013	Rocking beam and trunnion	Hobfolk	CIN-BM-01	HF-04-0113	1	Head frame	18/08/26	12 mo
CIN-MEC-04014	Geared motor, conveyor	Trellworth	GM71-0.55-22	TW-249203	1	Conveyor head	18/08/26	24 mo
CIN-MEC-04015	Trunnion bearing, self-aligning	Norbeck	SA-2040	NB-77410	2	Head frame	18/08/26	12 mo
CIN-SFX-04021	Atomiser unit, heated	Vasmoor	AT-45H	VM-1180-44	1	Plant void 04-P1	18/08/26	12 mo
CIN-SFX-04022	Reservoir, 45 l, with float switch	Vasmoor	RS-45	VM-1180-51	1	Plant void 04-P1	18/08/26	12 mo
CIN-ELE-04031	Control panel, PLC and HMI	Sedgewray Controls	BC-SHW-04	BK-2610-08	1	Plant void 04-P1	18/08/26	24 mo
CIN-ELE-04032	Safety relay, dual channel	Sedgewray Controls	PNZ-X4	BK-2610-19	1	Panel 04-P1	18/08/26	24 mo
CIN-ELE-04033	Gate interlock switch, guard-locking	Sedgewray Controls	IL-22G	BK-2611-02/03/04	3	Gates A, B, C	18/08/26	24 mo
CIN-LFT-04051	Maintenance davit, SWL 250 kg	Ardmoss	DV-250-S	AM-5502	1	Drum housing	18/08/26	12 mo
CIN-LFT-04052	Sling and shackle set	Ardmoss	SL-2T / SH-2T	AM-5502-A	1	Area 04 store	18/08/26	12 mo

Warranty starts at take-over, not at delivery. Every start date above is 18 August 2026, the date of the take-over certificate — not the date the units arrived on site in April. Three months of warranty was recovered by writing it down correctly the first time. Originals, signed and stamped by both manufacturer and vendor, are at Appendix D.

SECTION 2.4

As-built drawings and recorded deviations

DRAWING	TITLE	REV	STATUS · SAMPLE
CIN-DE04-01	Area 04 — general arrangement and setting-out	C	As-built
CIN-DE04-02	Winding engine — head frame, elevations and sections	D	As-built
CIN-DE04-03	Winding engine — baseplate and holding-down details	B	As-built
CIN-DE04-04	Ore conveyor — frame, drive and skip fixings	C	As-built
CIN-EL04-01	Electrical schematic and panel layout	D	As-built
CIN-EL04-02	Safety circuit schematic — interlocks and e-stops	C	As-built

2.4.1 Recorded deviations from design intent

#	DESIGN INTENT	AS BUILT	WHY, AND WHAT IT MEANS LATER · SAMPLE
D1	Steam effect discharges four times per cycle	Twice per cycle; reservoir refill interval extended to match	Four discharges over-saturated the walkway handrail in still air and created a slip risk on the guest side. Reduced at commissioning and re-tested (§5.3). **Do not restore the original setting without repeating that test.**
D2	Conveyor frame fixed to the floor slab at 8 points	10 points; two added at the head end	Slab core samples found a service duct within the original fixing zone. Two fixings relocated and two added to keep the load path. Positions on CIN-DE04-04 rev C.
D3	Single e-stop at the walkway end	Two e-stops, walkway end and plant void	Added after the interlock review: a fitter inside the void could not reach the original. Both are in the same dual-channel circuit, so §5.2 proves both.
D4	Trunnion bearing greased for life	Re-greasable, with a remote grease line to the walkway side	The as-designed bearing could only be reached from a tower over the guest walkway, i.e. only out of hours. The remote line moves a 90-minute closure job to a 5-minute one. Lubrication point L3, §7.2.

> **These four facts are the reason the manual is written during the job.** Each was obvious on the day and unrecoverable six weeks later. D1 in particular is a safety decision that looks like a preference — without the note, the first person to “fix” the underwhelming steam effect reinstates a slip hazard and has no way of knowing.

SECTION 3.1

Start-up, shutdown and daily checks

3.1.1 Pre-opening sequence — duty technician, before guests

#	STEP	PASS CRITERION · SAMPLE
1	Walk the guest side. Check barrier, walkway surface and sightlines.	No standing water, no loose fixing, no obstruction.
2	Check all three access gates closed and latched.	Latched, and the HMI shows all three healthy.
3	Check reservoir level at the sight glass.	Above the marked minimum. Top up per §8.4 if not.
4	Maintenance isolator to RUN.	—
5	Press and release each e-stop in turn, then reset.	Element stops on each. If it does not, stop here and raise a fault.
6	Start from the HMI. Watch one complete cycle.	Drum 2.5 turns, beam full 24° sweep, two steam discharges, conveyor running.
7	Listen. Note any change from yesterday.	No new knock, squeal or rattle. A change is a fault even if nothing has stopped.
8	Sign the daily log.	Log entry is the record. An unsigned log is a check that did not happen.

3.1.2 Shutdown

Stop from the HMI, let the steam circuit purge for 90 seconds, then isolator to OFF. Stopping on the isolator while the atomiser is hot leaves standing water on a heated element overnight and is the single most common cause of scale on this unit.

SECTION 3.2

Normal operating parameters

PARAMETER	NORMAL	LIMIT	AT THE LIMIT · SAMPLE
Cycle time	90 s ± 2 s	> 96 s	Chain wear or drag. Inspect per §7.3.
Beam sweep	24°	< 21°	Eccentric or trunnion wear. Do not adjust the stop to compensate.
Conveyor speed	0.18 m/s	± 0.02 m/s	Belt tension. Tension per §7.3, do not over-tension.
Winder drive current	3.1–3.5 A	> 4.0 A	Mechanical binding. Stop and investigate; do not raise the trip.
Atomiser element temperature	92–96 °C	> 99 °C	Scale on the element. Descale per §8.4.
Reservoir consumption	14–18 l/day	> 24 l/day	Leak, or a nozzle passing. Check the tundish (§8.4).
Ambient at the walkway	—	Still air, < 0.3 m/s	In still air the plume does not clear. See deviation D1 and §5.3.

SECTION 3.3

Fault conditions and first response

INDICATION	MOST LIKELY CAUSE	DUTY TECHNICIAN MAY	MUST NOT · SAMPLE
HMI: GATE OPEN, element stopped	Gate not latched, or interlock switch misaligned	Close and latch the gate, reset at the HMI, watch one cycle.	Defeat, tape or bridge the switch. Ever, for any reason.
HMI: E-STOP LATCHED	E-stop pressed, or a broken conductor in the circuit	Release the button, reset, watch one cycle.	Reset a second time if it latches again. Raise a fault instead.

INDICATION	MOST LIKELY CAUSE	DUTY TECHNICIAN MAY	MUST NOT · SAMPLE
HMI: `DRIVE FAULT 04-01`	Winder overcurrent trip	Nothing. Isolate and call the controls contractor.	Reset the drive. A repeat trip on a jammed mechanism damages it.
Steam effect not discharging, motion normal	Reservoir low, or nozzle blocked	Check level, top up per §8.4, run one cycle.	Run the atomiser dry to see if it clears.
New knock once per drum revolution	Loose drum fastener, or eccentric wear	Stop the element, isolate, raise a fault.	Run it to the end of the day “to see if it gets worse”.
Beam not reaching full sweep	Trunnion bearing or eccentric wear	Log the measured sweep, raise a fault.	Adjust the mechanical stop.
Water on the walkway	Plume not clearing, or a nozzle passing	Stop the steam effect only, cone the area, raise a fault.	Leave it running while cleaning up around guests.
Element stopped, no HMI indication	Loss of the venue fire-alarm healthy contact	Check with the duty manager whether the venue is in alarm.	Attempt any restart before the venue confirms the alarm is cleared.

The “must not” column is the useful half. Every entry in it is something a competent, well-meaning person would otherwise reasonably try. A fault table that only lists what to do is a table that assumes nobody will improvise, and somebody always will — usually at 09:50 with a queue forming.

SECTION 5

Commissioning and test records

The evidence that it worked, on a stated date, measured by a named person. Everything below is a result, not an assurance.

5.1 Electrical installation — test results

Tested to BS 7671:2018+A3:2024, the edition in force at the date of test. Certificate KM4120-EIC-04-0112 at Appendix B. Instrument: insulation and continuity tester, cal. cert. IT-88104, calibration due 11/02/27.

CIRCUIT	PROTECTION	R1+R2 (Ω)	INSULATION @500 V (MΩ)	RCD TRIP (MS)	RESULT · SAMPLE
Winder drive, 3-ph	C16 3P	0.32	> 299	—	Pass
Conveyor drive, 3-ph	C10 3P	0.41	> 299	—	Pass
Control supply, 1-ph	B6 + RCBO 30 mA	0.58	> 299	21.4	Pass
Atomiser, 1-ph	B10 + RCBO 30 mA	0.66	184	24.1	Pass
Plant void lighting and socket	B16 + RCBO 30 mA	0.74	> 299	19.8	Pass

> **The atomiser circuit reads 184 MΩ, not >299.** That is a pass — comfortably above the 1.0 MΩ minimum — and it is recorded as a number rather than a tick precisely so that the next test has something to be compared against. A circuit that falls from 184 to 40 is telling you something a year before it fails, and only if somebody wrote 184 down.

5.2 Interlock and emergency-stop proving

Method: each device operated in isolation with the element running at normal cycle; time from actuation to cessation of motion measured by the panel's own diagnostic timer and confirmed by high-speed capture. Both channels proved independently by disconnecting one at a time. Validated against BS EN ISO 13849-1:2023.

DEVICE	CH. A (S)	CH. B (S)	BOTH (S)	LIMIT	STEAM CLOSED	RESULT · SAMPLE
Gate A interlock	0.28	0.31	0.27	≤ 0.40	Yes	Pass
Gate B interlock	0.30	0.29	0.28	≤ 0.40	Yes	Pass
Gate C interlock	0.33	0.34	0.32	≤ 0.40	Yes	Pass
E-stop, walkway end	0.26	0.27	0.25	≤ 0.40	Yes	Pass
E-stop, plant void	0.29	0.28	0.27	≤ 0.40	Yes	Pass
Fire alarm interface	0.35	single channel, fail-safe		≤ 0.50	Yes	Pass

Architecture	Category 3 — single fault does not lead to loss of the safety function; faults detected at or before the next demand
Performance level achieved	PL d, validated 21/07/26. Calculation and component data at Appendix B.
Proof-test interval	Quarterly, by the method above — see §6.2. Recorded, not assumed.
Invalidating change	Any alteration to the safety circuit, **including a like-for-like replacement of a different make or part number**, invalidates PL d until the assessment is re-done.

5.3 Functional endurance and effect commissioning

TEST	METHOD	RESULT	VERDICT · SAMPLE
Continuous cycle endurance	200 uninterrupted cycles, 5 h	200 completed, 0 faults; cycle 89.6–90.8 s	Pass
Winder drive current under load	Clamp meter, 20 cycles	3.2–3.4 A	Pass
Beam sweep	Digital inclinometer, 10 cycles	23.8–24.1°	Pass

TEST	METHOD	RESULT	VERDICT · SAMPLE
Conveyor speed	Timed over 5 m, 5 runs	0.179–0.182 m/s	Pass
Steam plume — still air	Doors closed, air movement < 0.1 m/s, 4 discharges/cycle, 30 min; handrail and walkway checked with a surface moisture meter and a pendulum slip test	**Fail.** Handrail wetting and walkway surface reading below the venue's slip threshold	**Fail**
Steam plume — still air, retest	As above, reduced to 2 discharges/cycle, 60 min	Handrail dry; walkway slip reading within threshold throughout	Pass
Steam plume — door open	Cross-flow 0.4 m/s, 2 discharges/cycle, 30 min	Plume clears within 4 s; no deposition	Pass
Reservoir consumption	Metered over 3 operating days	15.4, 16.1, 15.8 l/day	Pass

The failed test is left in. It is the reason deviation D1 exists, it is the evidence that the current setting is a safety control rather than a preference, and it is what a future engineer needs in order to understand why the effect is underwhelming and must stay that way. A commissioning record with no failures in it has usually been rewritten rather than run.

5.4 Lifting equipment – initial thorough examination and load test

ITEM	SWL	TEST LOAD	RESULT	NEXT DUE · SAMPLE
Davit CIN-LFT-04051	250 kg	375 kg (1.5×)	No permanent deformation; socket and pin sound	17/08/27 (12 mo)
Sling CIN-LFT-04052	2 t	Visual and certificate	Pass; identification tag legible	**17/02/27 (6 mo)**
Shackle CIN-LFT-04052	2 t	Visual and certificate	Pass; pin and body marked	**17/02/27 (6 mo)**

The sling and shackle are on a 6-month interval, not 12. Under LOLER 1998 lifting accessories require thorough examination every 6 months, while other lifting equipment such as the davit itself is 12-monthly — or to a written scheme of examination if one is drawn up. Putting the whole set on the davit's annual date is the most common way this element would fall out of compliance, and it would do so silently. Report of thorough examination at Appendix B; the interval runs from the date of examination, not the date the report arrives.

COMMISSIONED BY	ELECTRICAL TESTS BY	THOROUGH EXAMINATION	WITNESSED
R. Okonkwo	**T. Vasey**	**L. Brightwell**	**D. Marchetti**
Commissioning engineer, Hobfolk	Approved electrician	Competent person, independent	Consultant — M&E
R.Okonkwo	*T.Vasey*	*L.Brightwell*	*D.Marchetti*
21/07/26	19/07/26	17/08/26	21/07/26

SECTION 6

Inspection regime

Who inspects it, against what, how often, and — the part usually missing — what happens when it fails.

6.1 Statutory examinations

EXAMINATION	UNDER	INTERVAL	BY WHOM	RECORD · SAMPLE
Thorough examination — davit	LOLER 1998	12 months	Competent person, independent of the operator	Report of thorough examination
Thorough examination — sling and shackle	LOLER 1998	**6 months**	Competent person, independent of the operator	Report of thorough examination
Inspection of work equipment	PUWER 1998	Monthly — see §6.2	Competent maintenance technician	Inspection record, retained until the next but one
Periodic inspection, fixed electrical installation	BS 7671	3 years, or the venue's scheme if shorter	Qualified electrician	Electrical installation condition report
Legionella risk review	ACOP L8 / HSG274 Pt 3	2 years, or on any change to the system or its use	Responsible person, or competent adviser	Written scheme review record

> **Not on this list:** annual in-service examination by a registered inspection body, and a Declaration of Operational Compliance. Neither applies — the element is not an amusement device. See §1.3. If the element is ever modified so that it carries a person, both become due before it next operates.

6.2 Duty-holder inspections

CHECK	INTERVAL	AGAINST	PASS CRITERION · SAMPLE
Pre-opening functional check	Daily, before guests	§3.1.1	All eight steps signed. Any "no" stops the element opening.
Visual and fastener check	Monthly	§7.1	No corrosion, no cracked scenic joint, no loose or missing fastener.
Interlock proving	Quarterly	§5.2 method	All six devices stop the element within limit, both channels proved. **No override, no exception, no partial pass.**
Torque re-check, structural fixings	Annual	§7.4	Every joint at or above the stated value. Record the value found, not just a tick.
Beam sweep and cycle time	Quarterly	§3.2	Within the limits table. Record the measurement.
Atomiser descale and nozzle clean	Quarterly	§8.4	Element clean; both nozzles passing an even plume.
Reaction-to-fire, repaired scenic areas	On any repair	§8.5	Repair made in the same classified system. Record which system.

6.3 Corrective action and return to service

WHAT FAILED	IMMEDIATE ACTION	RETURN TO SERVICE AUTHORISED BY	EVIDENCE REQUIRED · SAMPLE
Any statutory examination	Element out of service. Isolate and lock off.	Head of Operations, on the competent person's clearance	Clean report of thorough examination, or the written repair and re-examination
Interlock proving	Element out of service immediately. No degraded running.	Head of Operations, on the controls contractor's certificate	Repeat of the full §5.2 test, all six devices, both channels, recorded
Pre-opening functional check	Element does not open. Area coned if the fault is guest-side.	Area 04 maintenance office	Fault cleared and one full cycle observed
Parameter outside limit (§3.2)	Log the measurement, raise a fault. Element may continue only if the fault is not motion-related.	Area 04 maintenance office	Measurement back within limit, recorded
Torque below stated value	Re-torque, then inspect the joint for elongation or bearing damage.	Area 04 maintenance office	Value found and value set, both recorded
Reaction-to-fire evidence missing for a repair	Treat as an unclassified material. Report to the venue's fire safety manager.	Venue fire safety manager	Test evidence for the system used, or the repair redone

Two rules that are not negotiable at operational level. An interlock never runs in a degraded state — there is no such thing as two gates out of three. And no return to service after a statutory failure is authorised by the person who did the repair. Both exist because the pressure to reopen is always applied at the level least able to resist it.

SECTION 7.1

Planned maintenance schedule

All work under a permit and a safe isolation (§10.2), by or under the direct supervision of a person competent for that task (§10.3). Every activity recorded: what, when, by whom, and what was found.

INTERVAL	TASK	DETAIL AND ACCEPTANCE · SAMPLE
Daily	**Pre-opening functional check — §3.1.1. Eight steps, signed.**	
Weekly	Reservoir and tundish	Level, and the tundish dry. A wet tundish is a passing nozzle or a failed seal — investigate, do not just wipe it.
Weekly	Guest-side sweep	Barrier fixings, walkway surface, no deposition under the nozzles.
Monthly	Scenic and FRP condition	No cracking or peeling, especially at joints where cladding meets steel. Photograph anything new.
Monthly	Fastener visual	All accessible fasteners present, no corrosion staining, no witness marks of movement.
Monthly	Chain and belt	Chain slack within 10–14 mm at mid-span. Belt tracking central, no edge fray.
Quarterly	Interlock proving	Full §5.2 method. Recorded per device, per channel.
Quarterly	Lubrication	Points L1–L4, §7.2. Correct grade, stated quantity.
Quarterly	Atomiser descale	§8.4. Element and both nozzles.
Quarterly	Measure and record	Beam sweep, cycle time, conveyor speed, drive current. Numbers into the log.
Annual	Torque re-check	All structural joints, §7.4. Value found and value set.
Annual	Galvanising and coating	Inspect for breakdown at mechanical stress points and water paths. Repair per §7.5.
Annual	Trunnion and eccentric wear	Measure clearance. Compare against the previous year, not only against the limit.
Annual	Thorough examination	Davit — competent person. Sling and shackle at 6 months.

7.2 Lubrication schedule

PT	LOCATION	GRADE	QTY · SAMPLE
L1	Drum shaft bearing, drive side	NLGI 2 lithium EP	8 g
L2	Drum shaft bearing, free side	NLGI 2 lithium EP	8 g
L3	Trunnion bearing (remote line, walkway side — see D4)	NLGI 2 lithium EP	12 g
L4	Eccentric bush	NLGI 2 lithium EP	5 g
–	Drive chain	Dry PTFE chain lube	As reqd

Do not use a wet chain lubricant. The chain runs directly above a guest-visible scenic face and a wet lubricant carries dust into the finish, which cannot be cleaned off without recoating.

7.3 Wear parts and expected life

PART	EXPECTED LIFE	CONDEMN AT · SAMPLE
Drive chain	4–5 years	2% elongation
Conveyor belt	6–8 years	Edge fray or splice lift
Trunnion bearing	8–10 years	Clearance > 0.6 mm
Eccentric bush	5–6 years	Sweep < 21°
Atomiser element	2–3 years	Temp > 99 °C after descale
Gate interlock switch	Per maker's cycle rating	Any proving failure

Expected life assumes the venue's published operating calendar of roughly 1,900 hours a year. On extended seasons, scale by hours run, not by date.

7.4 Torque schedule

JOINT	FASTENER	GRADE	TORQUE	RE-CHECK	NOTE · SAMPLE
Head frame baseplate to slab	M20 anchor	8.8	380 N·m	Annual	Record the value found before re-torquing
Head frame match plates	M16	8.8	195 N·m	Annual	Cross-pattern, two passes
Drum flange to shaft	M12	8.8	83 N·m	Annual	Loctite 243 on reassembly
Trunnion pillow block	M16	8.8	195 N·m	Annual	Check alignment before final torque
Conveyor frame to slab	M12 anchor	8.8	83 N·m	Annual	10 points — see deviation D2

JOINT	FASTENER	GRADE	TORQUE	RE-CHECK	NOTE · SAMPLE
Skip fixings to belt	M8	A2-70	18 N·m	Quarterly	Stainless — do not apply the carbon-steel value
Scenic cladding fixings	M6	A2-70	9 N·m	Monthly visual	Over-torque cracks the FRP boss

> **Two values on this page exist because they are routinely got wrong.** The skip fixings are A2-70 stainless, which takes roughly half the torque of an 8.8 carbon bolt of the same size; applying the carbon figure will gall and snap them. And the cladding fixings are limited by the FRP boss, not by the bolt — the correct torque feels loose, and tightening “properly” is what cracks the moulding.

7.5 Scenic repair and touch-up

Repairs to the guest-visible envelope must be made in the same classified coating system recorded at §8.5, from the same manufacturer, and the system used must be written into the maintenance record. A colour match made in a different system may be indistinguishable to the eye and a different Euroclass on paper — which is discovered, if at all, at the next fire risk assessment. Stocked materials and the local distributor are at §11.2.

SECTION 8

Services and utilities

8.1 Electrical load schedule

CIRCUIT	RATED	RUNNING	STARTING	PROTECTION	CABLE	ORIGIN · SAMPLE
Winder drive	1.5 kW	3.2 A	11.4 A	C16 3P	4C 2.5 SWA	DB-04A/7
Conveyor drive	0.55 kW	1.4 A	5.1 A	C10 3P	4C 2.5 SWA	DB-04A/9
Atomiser, heated	1.8 kW	7.8 A	7.8 A	B10 + RCBO 30 mA	3C 2.5 SWA	DB-04A/11
Control supply	0.3 kW	1.3 A	1.3 A	B6 + RCBO 30 mA	3C 1.5 SWA	DB-04A/13
Plant void light and socket	1.0 kW	4.3 A	—	B16 + RCBO 30 mA	3C 2.5 SWA	DB-04A/15
Maximum demand, after diversity	**5.2 kW**	**14.8 A/ph**	**Supply requirement below**			

8.2 Supply requirement

System	400/230 V, 50 Hz, 3-phase and neutral, TN-S
Incoming protection	32 A TP&N at DB-04A
Prospective fault current	1.8 kA at the panel
External earth loop Z_e	0.21 Ω
Local isolation	Lockable rotary isolator at the panel, plus the maintenance isolator inside
Earthing and bonding	All exposed steelwork bonded; head frame and conveyor frame independently bonded to the panel earth bar

8.3 Ingress protection

LOCATION	RATING	WHY · SAMPLE
Control panel, plant void	IP54	Indoor, dust
Gate interlock switches	IP67	Wash-down and plume drift
Winder drive motor	IP55	Within the plume envelope
Conveyor drive motor	IP55	Within the plume envelope
Atomiser enclosure	IP65	Wet by function
Junction boxes, head frame	IP66	Above the plume, condensate path

The IP67 switches are not over-specified. The plume drifts upward on shutdown and the gate switches sit in its path; an IP54 switch in that position fills with condensate and fails to a fault within a season.

8.4 Water, treatment and drainage

ITEM	DETAIL	MAINTENANCE · SAMPLE
Supply	15 mm potable, from the Area 04 stopcock. Double check valve at the fill point.	Verify the check valve annually. It is the only backflow protection.
Reservoir	45 l, lidded, opaque, with a float switch and a drain valve	Drain, clean and refill quarterly. Never top up a part-full reservoir that has stood more than 7 days — drain it.
Treatment	Scale inhibitor dosed at fill, per §11.2	Dose at every full fill, not at every top-up. Safety data sheet at Appendix C.
Descaling	Element and both nozzles	Quarterly, or when element temperature exceeds 99 °C. Isolate and allow 20 min before access — see §10.1.
Drainage	Condensate falls to a tundish, then to the Area 04 gully via a trapped 32 mm waste	Weekly: the tundish must be dry in normal running. A wet tundish is a passing nozzle or a failed seal.

8.5 Reaction to fire – scenic materials in the guest envelope

MATERIAL	LOCATION	CLASSIFICATION	EVIDENCE · SAMPLE
FRP cladding, head frame	Guest-facing, full height	B-s1,d0	Classification report, Appendix B
Scenic timber facing, plinth	Guest-facing, below 1.2 m	B-s1,d0	Treated system; classification report, Appendix B

MATERIAL	LOCATION	CLASSIFICATION	EVIDENCE · SAMPLE
Coating system over FRP	Guest-facing	Classified as a system with the substrate	Classification report, Appendix B
Dummy ore skips	Guest-visible, on the belt	B-s1,d0	Classification report, Appendix B
Rope dressing	Guest-visible, decorative only	C-s1,d0	Classification report, Appendix B. Accepted by the venue's fire strategy for this quantity and position — see the note.

> Classified to BS EN 13501-1:2018. The rope dressing is a lower class than everything around it and is recorded that way deliberately: it was accepted on the basis of quantity and position within the venue's fire strategy, which means **replacing it with more of it, or moving it, is a change to that strategy** and not a like-for-like. Nothing in this table is a substitute for the venue's own fire risk assessment; it is the input to it.

8.6 Legionella – written scheme

The steam effect atomises water into a respirable aerosol in a space occupied by the public. Managed under ACOP L8 with the technical guidance in HSG274 Part 3, which is the part covering other risk systems including atomising and misting devices — not Part 2, which covers hot and cold water services.

CONTROL	FREQUENCY	DETAIL AND RECORD · SAMPLE
Reservoir drain, clean, refill	Quarterly	Full drain. Wipe down. Refill with fresh dosed water. Recorded with date and operative.
Stagnation control	Every 7 days	If the element has not run for 7 days, drain and refill before the next run. Do not run on standing water.
Temperature check, reservoir	Monthly	Below 20 °C. Above that, investigate the plant void ventilation, not the reservoir.
Nozzle clean and descale	Quarterly	Scale is a biofilm substrate as well as a performance problem.
Risk assessment review	2 years, or on any change	Any change to the system, its use, its occupancy or its run pattern triggers a review before that date.
Responsible person	Named, in post	Venue Head of Operations, or the deputy named in the venue's water safety plan.

SECTION 9

Emergency procedures

9.1 Escalation

SITUATION	FIRST CALL	THEN · SAMPLE
Person beyond the barrier	E-stop, then duty manager	Do not restart until the area is confirmed clear by two people.
Injury	Venue first aid, ext 4999	Duty manager. Preserve the scene and the HMI log; do not clear the fault.
Fire or alarm	Venue procedure	The element stops on loss of the alarm interface. Do not attempt a restart.
Water on the walkway	Stop the steam effect, cone the area	Area 04 maintenance office. Motion may continue.
Element stalled mid-cycle	Duty technician	§9.2. Nobody enters the head frame before isolation is proved.
Out of hours, any of the above	Venue duty manager, call-out list	Controls contractor for anything inside the panel; nobody else opens it.

9.2 Stalled element – recovery

A stall is motion stopping with the drives still energised: the drum stops, the HMI shows a drive fault, and there may be a smell of hot insulation.

1. **Do not reset the drive.** A repeat trip against a jammed mechanism is what turns a fouled chain into a bent shaft.
2. Isolate at the local rotary isolator, lock off and hold the key (§10.2).
3. Prove dead at the panel test points before any access. Test the tester, prove dead, test the tester again.
4. **Before entering the head frame, chock the beam.** The beam is counterweighted; it can be near balance and still hold energy. The chock lives clipped to the frame at the marked position and is the only approved one.
5. Establish the cause visually before touching anything. Photograph it.
6. Raise a fault. Return to service under §6.3 — not by the person who cleared it.

9.3 Manual release of the beam

Two people, both competent, both present. Never alone. The rocking beam is counterweighted and disconnecting the eccentric with the beam off its chocked position releases stored energy: the beam will swing to its balance point under gravity and it does not do so slowly.

Sequence: isolate and prove dead → chock the beam at the marked position → confirm the chock is seated by hand pressure, from outside the swing path → only then release the eccentric → recover with the davit (§5.4) if the beam must be lowered.

Permitted: mechanically competent persons trained on this element and recorded at §10.3. Not permitted: duty technicians, whatever the pressure to reopen.

9.4 Interface with venue evacuation

Does the element form part of an escape route?	**No.** The guest walkway passes it; the route continues past it and does not depend on it.
Behaviour on venue alarm	The venue's fire panel holds a healthy contact into the element's safety circuit. Loss of that contact stops both drives and closes the steam solenoid. Fail-safe: a cut or disconnected cable stops the element.
Does it need power to fail safe?	No. Loss of supply is a safe state; nothing is held open or up by power.
Guest release	Not applicable — no guest is carried, contained or restrained by the element at any point in the cycle.
Restart after an alarm	Only once the venue confirms the alarm cleared, then a deliberate HMI reset. The element will not self-restart.
Testing this interface	Proved as part of the venue's alarm test, and recorded in the element log — not only in the fire log, or nobody here ever sees the result.

SECTION 10.1

Residual risk — for whoever maintains this next

The CDM information. Written for a person who has never seen this element and may be reading it in ten years, on a project nobody here knows about.

RESIDUAL HAZARD	WHERE	WHAT A STRANGER NEEDS TO KNOW · SAMPLE
Stored energy — counterweight	Rocking beam trunnion	Near balance is not safe. Chock at the marked position before disconnecting the eccentric. §9.3.
Hot surface	Atomiser element and nozzle bodies	Reaches 96 °C in normal running. Isolate and allow 20 minutes. Labelled at the hatch.
Working at height	Upper drum housing, 3.6 m	**No permanent edge protection and no anchor point rated for fall arrest.** Requires a tower and a second person. Do not clip to the head frame — it is not rated and is not marked as rated.
Restricted access	Void behind cladding panel 04-C	Single point of entry, no forced ventilation. Two-person rule. Not a confined space under normal conditions; it becomes one if solvent-based coatings are used inside it.
Slip risk, guest side	Walkway beneath the nozzles	Controlled by limiting discharge to twice per cycle. Deviation D1 and §5.3 explain why. Restoring the original setting reinstates the hazard.
Aerosol exposure	Plume envelope	Managed under §8.6. Do not run the atomiser with the reservoir bypassed or on untreated standing water.
Substances	Coatings, scale inhibitor, descaler	Safety data sheets at Appendix C. The descaler is acidic and must not be mixed with the inhibitor.
Sharp edges, unfinished	Rear faces of scenic panels	Guest-facing edges are dressed; rear faces are not. Gloves inside the frame.

10.2 Safe isolation

Lockable rotary isolator at the panel, one lock per person working, keys held by the holder and not in the office. Prove dead at the marked panel test points using the prove–test–prove method. **The atomiser retains a heated element after electrical isolation** — electrical isolation is not thermal isolation, and the 20-minute wait is not optional. Water isolation is at the Area 04 stopcock, which is outside the scope of this manual and outside this room; find it before you need it.

10.3 Competence — who may do what

ROLE	MAY	MAY NOT	EVIDENCE · SAMPLE
Duty technician	Daily check, reset after a gate or e-stop trip, top up the reservoir, cone off an area	Open the panel, enter the head frame, reset a drive fault, adjust anything	Venue induction plus element briefing, recorded
Maintenance technician	All of §7 under permit and isolation; monthly and quarterly checks	Work inside the control panel; alter the safety circuit	Mechanical competence plus element-specific training, recorded and refreshed every 2 years
Controls contractor	Panel, PLC, safety circuit, interlock proving	Alter the safety architecture without re-validating PL d (§5.2)	Contractor's own competence records, held by the venue
Competent person, LOLER	Thorough examination of the davit and accessories	—	Independent of the operator and of the maintenance function

> **"Competent" means recorded.** Every row above is evidenced by a record the venue holds and can produce. A person who is genuinely competent but whose training is not written down is, at an inspection or after an incident, indistinguishable from one who is not.

SECTION 11.1

Warranty register

COVERED	PROVIDER	START	TERM	EXPIRES	EXCLUDED · SAMPLE
Geared motors × 2	Trellworth, via Hobfolk	18/08/26	24 mo	18/08/28	Wear parts; damage from a raised trip setting
Control panel and safety circuit	Sedgewray Controls	18/08/26	24 mo	18/08/28	Any circuit altered by others
Atomiser and reservoir	Vasmoor, via Hobfolk	18/08/26	12 mo	18/08/27	**Scale damage where the quarterly descale is not evidenced**
Fabrication and finishes	Hobfolk	18/08/26	12 mo	18/08/27	Impact; repairs not made in the classified system
Davit and accessories	Ardmoss	18/08/26	12 mo	18/08/27	Use beyond SWL; missed thorough examination

> **Three of these five are void without a maintenance record.** The atomiser warranty is the live one: it is voided by scale, scale is prevented by the quarterly descale, and the only thing that will establish the descale happened is the §7.1 log. The log is the claim.

SECTION 11.2

Recommended spares

PART	REFERENCE	LEAD TIME	HOLD ON SITE	SOURCE · SAMPLE
Drive chain, 1 m section	CIN-SP-04101	3 days	1 length	Trellworth, or any stockist to the same pitch and grade
Trunnion bearing, self-aligning	CIN-SP-04102	**6 weeks**	**1 — critical**	Norbeck. Lead time exceeds any tolerable closure.
Atomiser element assembly	CIN-SP-04103	4 weeks	1	Vasmoor, via Hobfolk
Gate interlock switch	CIN-SP-04105	10 days	**1 — critical**	Sedgewray Controls. **Same make and part number only** — a substitute invalidates PL d (§5.2).
Cladding fastener set, A2-70	CIN-SP-04104	Stock	100	Any stockist to the same grade
Touch-up kit, classified system	CIN-SP-04106	2 weeks	1 kit	Halverton Coatings (Midlands) — local distributor, holds stock
Scale inhibitor, 5 l	CIN-SP-04107	Stock	2	Halverton Coatings (Midlands)

Two parts are marked critical because their lead time is longer than the attraction can stand to be closed. That judgement belongs in the manual, where the next person can see the reasoning, rather than in the head of whoever placed the first order.

SECTION 11.3

Obsolescence

COMPONENT	RISK HORIZON	POSITION, AND WHAT TO DO ABOUT IT · SAMPLE
PLC and HMI	7–10 years	The likeliest whole-item obsolescence on the element. **The program is held in escrow by the venue as source, not only as a compiled download** — without that, a dead PLC is a re-engineering job rather than a swap. Verify annually that the escrow copy still opens.
Safety relay and interlock switches	8–12 years	Successor parts are usually available but rarely identical. Any change re-opens the PL d assessment at §5.2. Budget the assessment, not just the part.
Atomiser unit	5–8 years	Consumer-adjacent technology on a short product cycle. A successor with different plume characteristics requires the §5.3 still-air test to be repeated before it runs in front of guests.
Coating system	5–10 years	Reformulation is normal and the classification travels with the system, not the colour. A visual match in a new system needs its own BS EN 13501-1 evidence (§8.5).
Fabricated steelwork, drum, beam	Design life	Not obsolescence-limited. Re-makeable from the as-built drawings at Appendix A, which is why they are bound in rather than referenced.

> **Also recorded here, because CDM asks and nobody else will:** if the element is ever modified so that a person is carried, moved or supported by it, the BS EN 13814 exclusion at §1.3 falls, and design review, conformity assessment, initial test and registration all become due **before it next operates**. That is a different project, not a modification.

SECTION 11.4

Decommissioning and dismantling

STEP	ACTION	NOTE FOR THE PERSON DOING IT · SAMPLE
1	Isolate electrically and lock off; isolate water at the Area 04 stopcock	Thermal isolation of the atomiser is separate — 20 minutes.
2	Drain the reservoir and the condensate line to foul drain	Treated water. Safety data sheet at Appendix C.
3	Chock the beam, then disconnect the eccentric	**Counterweighted. See §9.3.** This is the step that hurts people.
4	Remove scenic cladding, working top down	Rear faces are not dressed. FRP dust on cutting — RPE and extraction.
5	Lift out drum, beam and drive as sub-assemblies	Drum 210 kg, beam 340 kg incl. counterweight, drive 46 kg. Marked lifting points only; the davit is 250 kg SWL and **will not take the beam**.
6	Release head frame baseplates	M20 resin anchors. Frame is stable at 3 of 8 fixings but not at 2 — do not strip round.
7	Segregate for disposal	Galvanised steel and FRP separately; FRP is not recyclable through the venue's standard route.
8	Return this manual, marked superseded, to the health and safety file	It stops being an operating document and becomes evidence of what was there.

APPENDIX A

As-built drawing set

Six sheets, as-built at practical completion. Bound in rather than referenced: a manual that points at a drawing register somebody else holds is the covering note, not the manual. Reduced to A4 from A3 originals; the scale on each sheet is the reduced scale and is stated on its face.

SHEET	TITLE	REV · SAMPLE
CIN-DE04-01	Area 04 — general arrangement and setting out	C
CIN-DE04-02	Winding engine — front elevation	D
CIN-DE04-03	Head frame — baseplate and holding-down detail	B
CIN-DE04-04	Ore conveyor — side elevation and skip fixing	C
CIN-EL04-01	Electrical distribution — single line	D
CIN-EL04-02	Safety circuit — interlocks and emergency stops	C

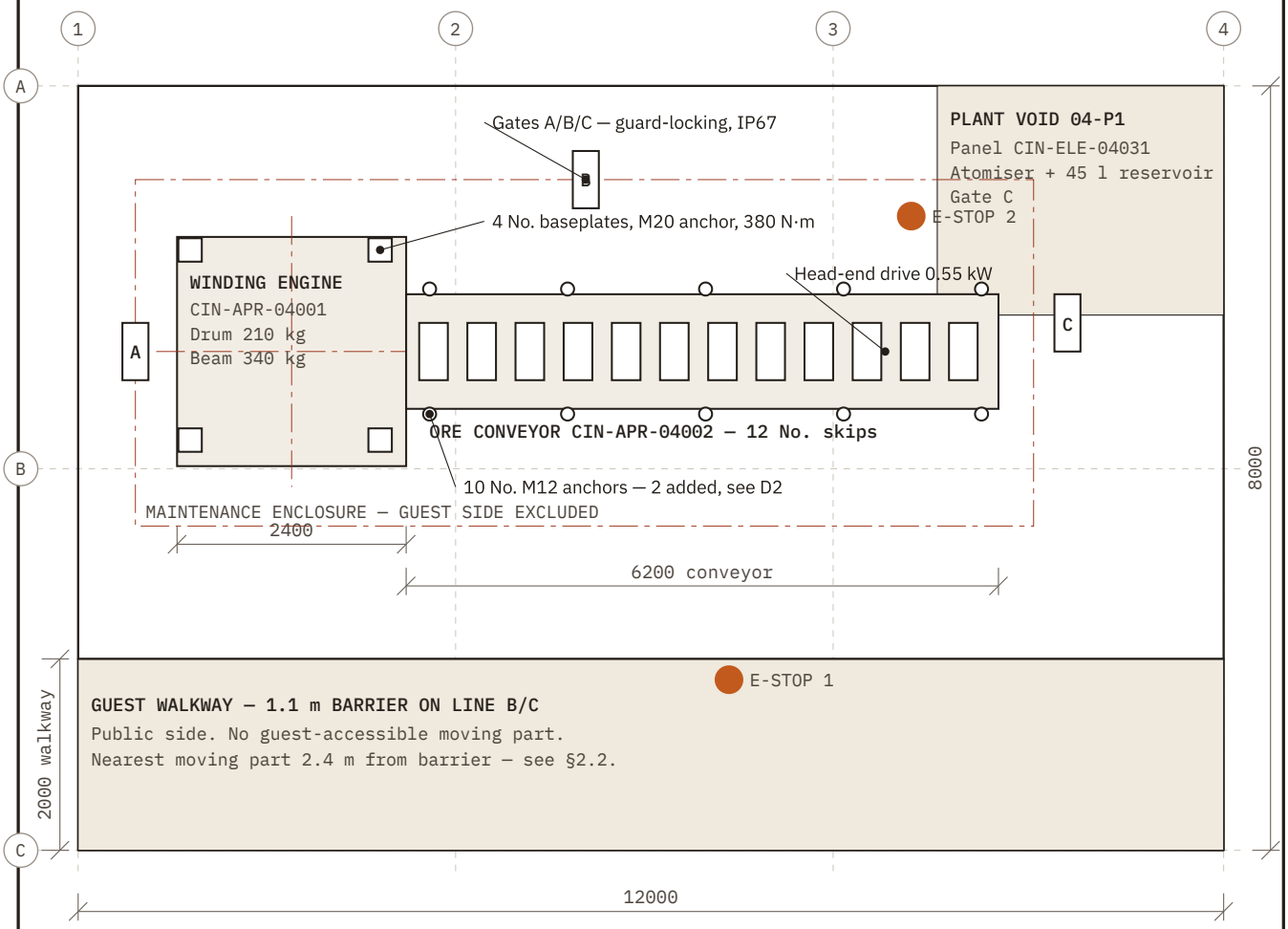

PLAN AT +0.000 — AREA 04

NOTES

1. Levels to venue datum. Slab as constructed; see D2 for the two added conveyor fixings.
2. Maintenance enclosure is the boundary of the maintenance regime, not a fire compartment.
3. No guest-accessible moving part. Guests are behind the barrier on line B/C throughout.
4. Gates A, B and C are guard-locking and monitored — see CIN-EL04-02.
5. E-stop 1 is reachable from the guest walkway. E-stop 2 is inside the plant void.
6. Drawing reduced from 1:50 @ A3. Do not scale off this sheet — figured dimensions only.

KEY

- Show element, as built
- Plant void / guest walkway
- Maintenance enclosure
- Interlocked gate
- Emergency stop
- Anchor / fixing point

REV	DESCRIPTION	DATE	BY	CHK	
A	Issued for construction	02/06/26	A.P.	R.O.	AS-BUILT REV C

PROJECT	DRAWING TITLE	SCALE	DRAWING No.
Cinderstone Mine · Area 04	General arrangement	1:75 @ A4	CIN-DE04-01
VENUE / CLIENT Kettlemoor Park Marlhollow Leisure Ltd	Plan at +0.000 · setting out	DRAWN	CHECKED / DATE
ORIGINATOR · HOBFOLK	SAMPLE — FICTITIOUS PROJECT	A.P.	R.O. · 18/08/26

FRONT ELEVATION — WINDING ENGINE CIN-APR-04001

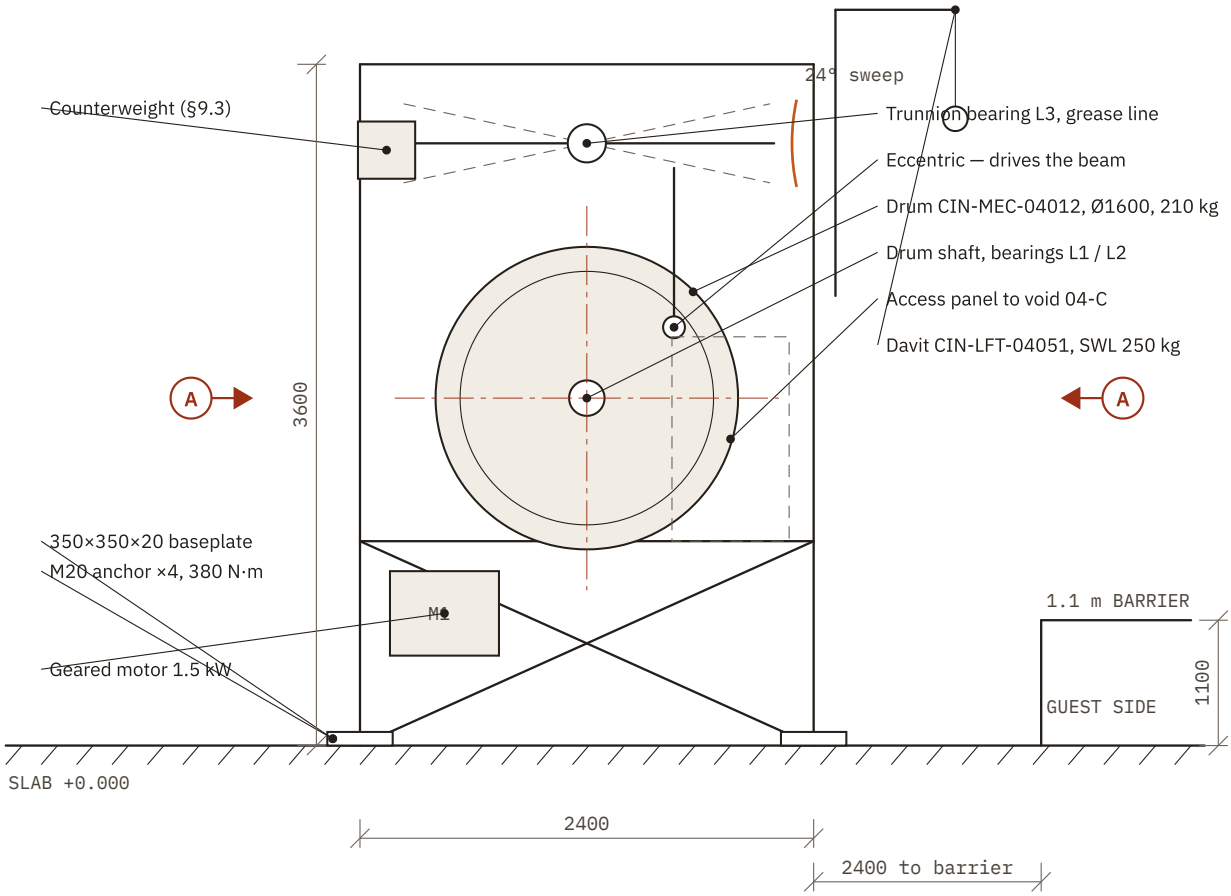

NOTES

1. Beam shown at mid-sweep. Dashed outline is the opposite extreme of travel.
2. Counterweighted. The beam holds energy at any position — chock before releasing the eccentric (§9.3).
3. No anchor point on this frame is rated for fall arrest. None is provided and none is to be used.
4. Rope on the drum is dressed, not loaded. It carries no part of any lift.

KEY

- As-built, visible
- Hidden / extreme of travel
- Centre line

REV	DESCRIPTION	DATE	BY	CHK	
A	Issued for construction	02/06/26	A.P.	R.O.	AS-BUILT REV D

PROJECT	DRAWING TITLE	SCALE	DRAWING No.
Cinderstone Mine · Area 04	Winding engine	1:40 @ A4	CIN-DE04-02
VENUE / CLIENT Kettlemoor Park Marlhollow Leisure Ltd	Front elevation · drum and beam	DRAWN	CHECKED / DATE
ORIGINATOR · HOBFOLK	SAMPLE — FICTITIOUS PROJECT	A.P.	R.O. · 18/08/26

1 · BASEPLATE — PLAN SCALE 1:5

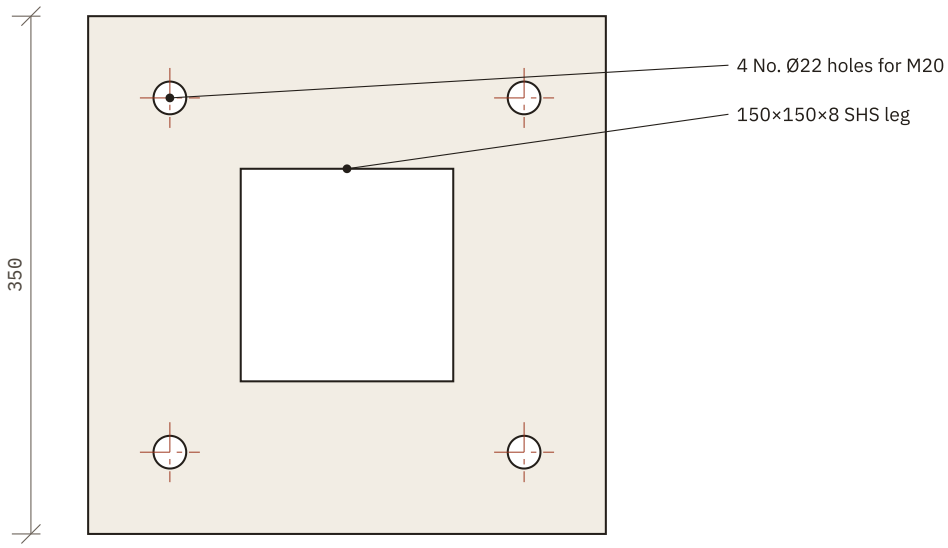

2 · SECTION

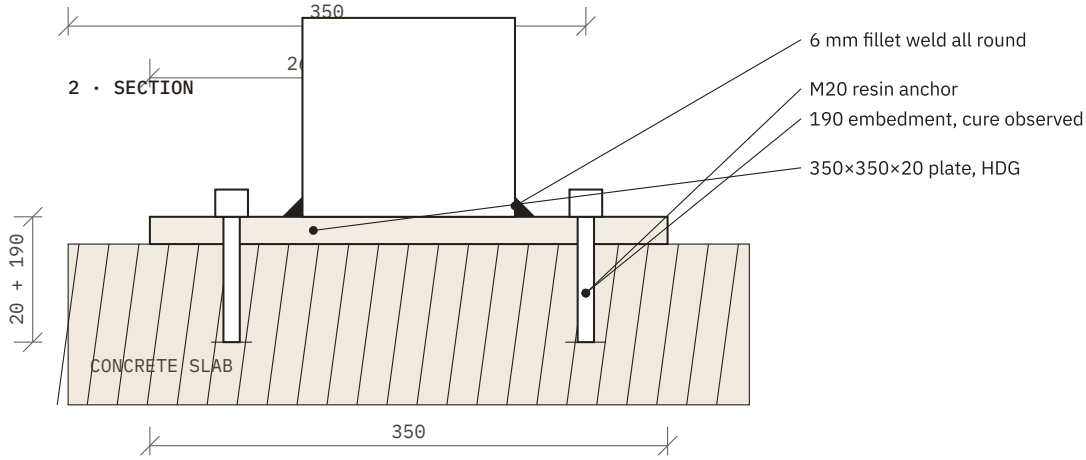

NOTES

1. Torque M20 to 380 N·m in two passes, cross-pattern. Record the value found before re-torquing.
2. Anchor cure time to the maker's figure for the ambient at the time of setting. Not negotiable against programme.
3. Hot-dip galvanised. Any coating breach at the weld is made good before the plate is loaded.
4. Re-check torque annually — §7.4.

REV	DESCRIPTION	DATE	BY	CHK	
A	Issued for construction	02/06/26	A.P.	R.O.	**AS-BUILT REV B**

PROJECT	DRAWING TITLE	SCALE	DRAWING No.
Cinderstone Mine · Area 04	Baseplate and holding-down	1:5 @ A4	CIN-DE04-03
VENUE / CLIENT Kettlemoor Park Marlhollow Leisure Ltd	Head frame · plan and section	DRAWN	CHECKED / DATE
ORIGINATOR · HOBFOLK	SAMPLE — FICTITIOUS PROJECT	A.P.	R.O. · 18/08/26

ORE CONVEYOR CIN-APR-04002 — SIDE ELEVATION

Belt 0.18 m/s · 12 dummy skips · guarding omitted from this view for clarity

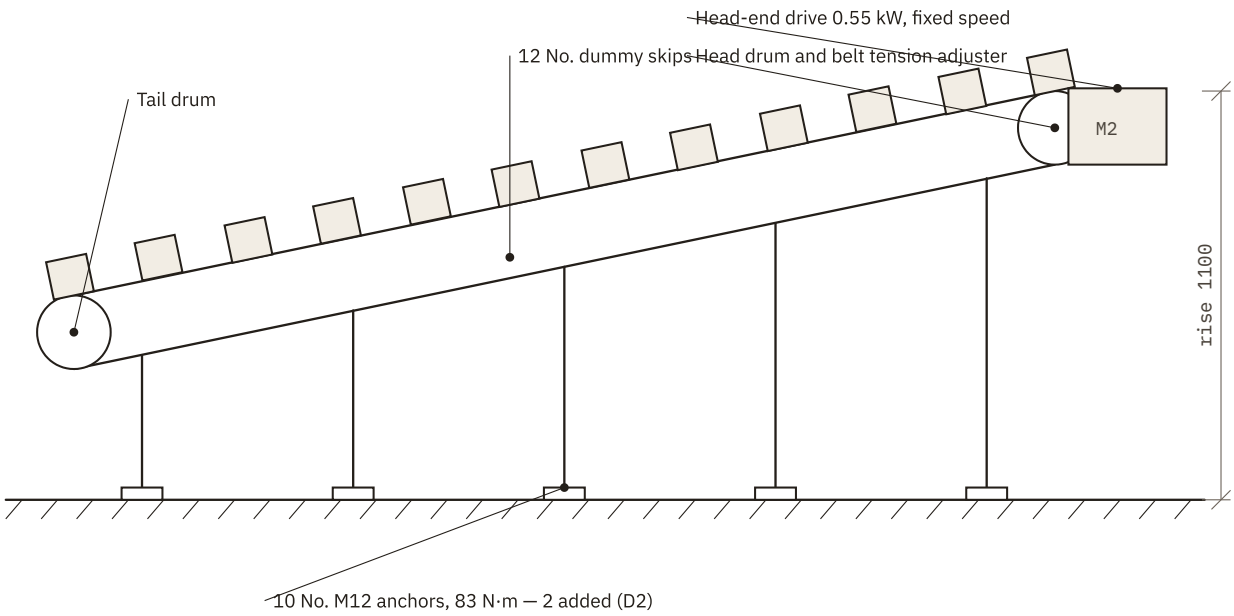

DETAIL 1 · SKIP FIXING SCALE 1:2

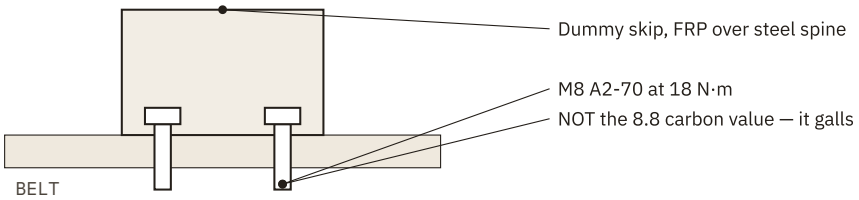

NOTES

1. Belt tracking central. Do not over-tension to correct tracking — §7.1.
2. Skip fixings are A2-70 stainless. Applying the 8.8 carbon figure will gall and snap them.
3. Guarding is fitted before any rotation, and is omitted from this view only for clarity.
4. Two fixings added at the head end against a service duct found on coring — deviation D2.

REV	DESCRIPTION	DATE	BY	CHK	
A	Issued for construction	02/06/26	A.P.	R.O.	**AS-BUILT REV C**

PROJECT	DRAWING TITLE	SCALE	DRAWING No.
Cinderstone Mine · Area 04	Ore conveyor	1:40 / 1:2 @ A4	CIN-DE04-04
VENUE / CLIENT Kettlemoor Park Marlhollow Leisure Ltd	Side elevation and skip fixing	DRAWN	CHECKED / DATE
ORIGINATOR · HOBFOLK	SAMPLE — FICTITIOUS PROJECT	A.P.	R.O. · 18/08/26

ELECTRICAL DISTRIBUTION — SINGLE LINE

Installed and certified to BS 7671:2018+A3:2024, the edition in force at the date of test

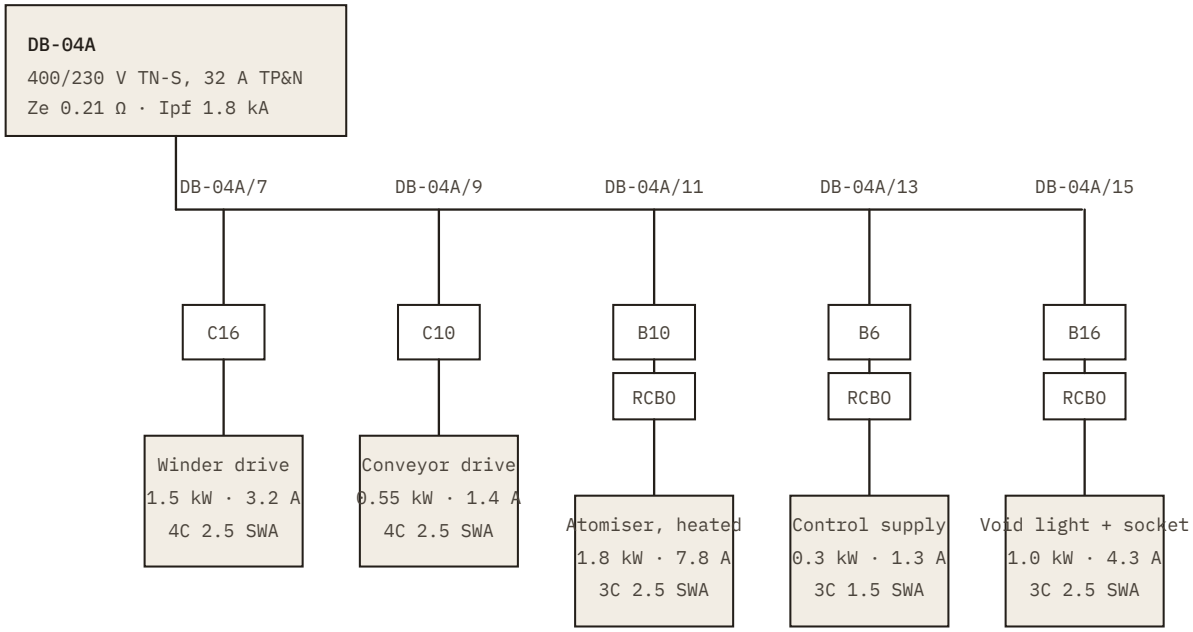

MAXIMUM DEMAND AFTER DIVERSITY: 5.2 kW · 14.8 A per phase

Local lockable rotary isolator at the panel, plus the maintenance isolator inside it.
All exposed steelwork bonded. Head frame and conveyor frame bonded independently.

KEY

- Protective device
- Load / final circuit

NOTES

1. Certificate KM4120-EIC-04-0112. Test results at §5.1 of the manual and at Appendix B.
2. BS 7671:2018+A4:2026 published April 2026; A3:2024 withdrawn 15 October 2026. Both current at issue.
3. The next periodic inspection is reported against whichever edition is current when it falls due.
4. Nothing on this sheet is held open or up by power. Loss of supply is a safe state.

REV	DESCRIPTION	DATE	BY	CHK	
A	Issued for construction	02/06/26	A.P.	R.O.	**AS-BUILT REV D**

PROJECT	DRAWING TITLE	SCALE	DRAWING No.
Cinderstone Mine · Area 04	Electrical distribution	NTS	CIN-EL04-01
VENUE / CLIENT Kettlemoor Park Marlhollow Leisure Ltd ORIGINATOR · HOBFOLK	Single line · Area 04 SAMPLE — FICTITIOUS PROJECT	DRAWN A.P.	CHECKED / DATE R.O. · 18/08/26

SAFETY CIRCUIT — INTERLOCKS AND EMERGENCY STOPS

Dual channel, monitored. Category 3, PL d to BS EN ISO 13849-1:2023 — validation at §5.2

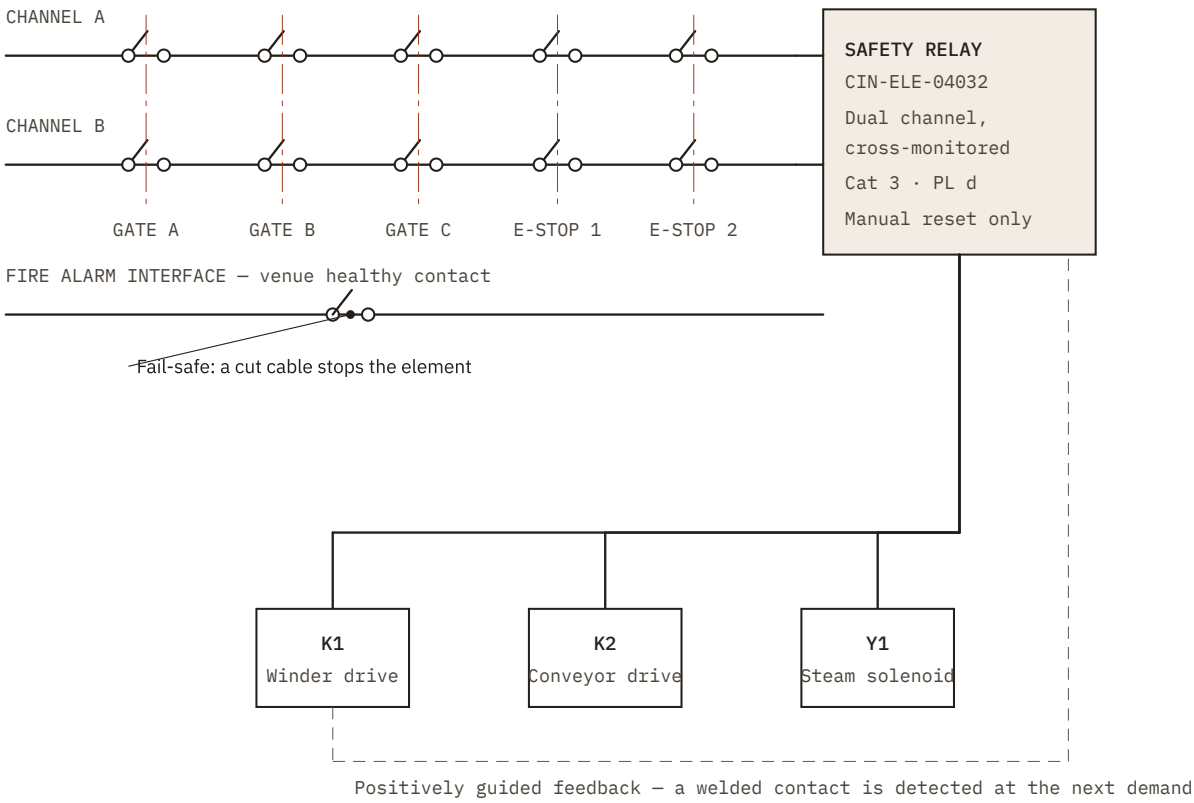

RESPONSE: both drives de-energised and the steam solenoid closed within 0.4 s

Measured 0.25–0.35 s across all six devices, both channels — §5.2.

NOTES

1. No device on this circuit may be bridged, taped or defeated. There is no degraded mode.
2. Replacing any device with a different make or part number invalidates the PL d assessment until it is re-done.
3. The element does not restart after a trip. Reset is deliberate, at the HMI, and is logged.
4. Proof-tested quarterly by the §5.2 method — every device, both channels, recorded.

REV	DESCRIPTION	DATE	BY	CHK	
A	Issued for construction	02/06/26	A.P.	R.O.	AS-BUILT REV C

PROJECT	DRAWING TITLE	SCALE	DRAWING No.
Cinderstone Mine · Area 04	Safety circuit	NTS	CIN-EL04-02
VENUE / CLIENT Kettlemoor Park Marlhollow Leisure Ltd	Interlocks, e-stops and outputs	DRAWN	CHECKED / DATE
ORIGINATOR · HOBFOLK	SAMPLE — FICTITIOUS PROJECT	A.P.	R.O. · 18/08/26

APPENDIX B

Certificates and test records

The evidence behind section 5. Originals held by the client; these are the certified copies bound into the manual, which is where a surveyor, an insurer or the next contractor will look for them.

DOCUMENT	TITLE	REF · SAMPLE
KM4120-EIC-04-0112	Electrical installation certificate and schedule of test results	B1
KM4120-SCV-04-0004	Safety-related control system — validation record, Cat 3 PL d	B2
BW/TE/26/4471	Report of thorough examination — lifting equipment (LOLER)	B3
KM4120-RTF-04-0009	Reaction to fire — classification summary, BS EN 13501-1	B4

APPENDIX B1

Electrical installation certificate

Issued under BS 7671:2018+A3:2024, the edition in force at the date of test.

CERTIFICATE NO.	KM4120-EIC-04-0112	DATE OF TEST	19/07/26
INSTALLATION AT	Cinderstone Mine, Area 04, Kettlemoor Park	EXTENT	New final circuits from DB-04A to show element CIN-APR-04001/2 and CIN-SFX-04003
DESIGN, CONSTRUCTION, INSPECTION AND TEST BY	T. Vasey, approved electrician, for Hobfolk	NEXT INSPECTION	By 19/07/29

B1.1 Supply characteristics and earthing arrangements

System type	TN-S	Nominal voltage U_0/U	230 / 400 V
Nominal frequency	50 Hz	Prospective fault current I_{pf}	1.8 kA
External loop impedance Z_e	0.21 Ω	Main protective device	32 A TP&N, BS 88-3
Main earthing conductor	16 mm² Cu, verified	Main protective bonding	10 mm² Cu to structural steel

B1.2 Schedule of test results

Instrument: insulation and continuity tester, serial IT-88104, calibration certificate CAL-26-0413, calibration due 11/02/27. Insulation resistance tested at 500 V d.c., minimum acceptable 1.0 MΩ.

CIRCUIT	DESCRIPTION	CABLE	PROTECTION	R1+R2 (Ω)	INS. L-L (MΩ)	INS. L-E (MΩ)	Z_s (Ω)	RCD (MS)	POLARITY · SAMPLE
04A/7	Winder drive	4C 2.5 SWA	C16 3P	0.32	>299	>299	0.53	—	✓
04A/9	Conveyor drive	4C 2.5 SWA	C10 3P	0.41	>299	>299	0.62	—	✓
04A/11	Atomiser, heated	3C 2.5 SWA	B10 RCBO	0.66	198	184	0.87	24.1	✓
04A/13	Control supply	3C 1.5 SWA	B6 RCBO	0.58	>299	>299	0.79	21.4	✓
04A/15	Void light + socket	3C 2.5 SWA	B16 RCBO	0.74	>299	>299	0.95	19.8	✓

Circuit 04A/11 is recorded as 184 MΩ, not >299. It is a pass by a wide margin. It is written as a number rather than a tick so the next test has something to compare against — a circuit that falls from 184 to 40 is telling you something a year before it fails, and only if somebody wrote 184 down.

B1.3 Declaration

The work covered by this certificate has been designed, constructed, inspected and tested to BS 7671:2018+A3:2024 and, to the best of my knowledge and belief, complied with that standard when put into service, except for the departures recorded below.

Departures from BS 7671	None.
Limitations	Containment concealed by the head frame cladding not visually inspected after fixing; continuity and insulation verified before and after.

DESIGNED BY	CONSTRUCTED BY	INSPECTED & TESTED BY	RECEIVED BY
T. Vasey	**T. Vasey**	**T. Vasey**	**S. Ardley**
Approved electrician	Approved electrician	Approved electrician	Client, Head of Operations
T.Vasey	*T.Vasey*	*T.Vasey*	*S.Ardley*
19/07/26	19/07/26	19/07/26	18/08/26

APPENDIX B2

Safety-related control system — validation record

Validated against BS EN ISO 13849-1:2023. This record is what makes the “Cat 3, PL d” on the drawings and in section 5.2 a claim somebody can check, rather than a label.

SAFETY FUNCTION	REQUIRED PL_R	ACHIEVED PL	DETERMINATION · SAMPLE
Gate interlock — stop on access	PL d	PL d	S2 F1 P2 → PL_r d. Achieved by dual-channel monitored architecture with positively guided feedback.
Emergency stop	PL d	PL d	Complementary protective measure; same subsystem.
Fire alarm interface stop	—	n/a	Not a machinery safety function. Single channel, fail-safe on loss of the healthy contact.

B2.1 Subsystem data

SUBSYSTEM	CATEGORY	DC	$MTTF_D$	CCF	BASIS · SAMPLE
Input — 3 gate switches	3	Medium, 92%	High, 100 a	Pass, 70 pts	Maker's B_{10D}, 1,900 h/a duty
Input — 2 e-stops	3	Medium, 90%	High, 100 a	Pass, 70 pts	Maker's B_{10D}
Logic — safety relay	3	High, 99%	High	Pass	Maker's declared PL e capability
Output — K1/K2 contactors	3	Medium, 90%	High, 100 a	Pass, 70 pts	Positively guided, feedback monitored
Combined performance level					**PL d, PFH_D within the d band**

B2.2 Validation by test

TEST	METHOD	RESULT	VERDICT · SAMPLE
Single-channel fault, each device	One channel disconnected at a time, demand applied	Stop achieved on the remaining channel; fault annunciated	Pass
Fault detection latency	Fault left in place, second demand applied	Relay latched, restart inhibited	Pass
Welded output contact	Contactor feedback loop opened	Reset refused	Pass
Stopping performance	Timed, all six devices, both channels	0.25–0.35 s against a 0.40 s limit	Pass
Restart behaviour	Power restored after supply loss	No automatic restart. Manual reset required and logged.	Pass

The validation is conditional on the parts staying the same. Any alteration to this circuit, **including replacement of a like-for-like device of a different make or part number**, invalidates the determination above until it is re-done. Spares are specified by make and part number at §11.2 for that reason and no other.

ASSESSED BY	TESTED BY	WITNESSED BY	ACCEPTED
Sedgewray Controls Ltd	**R. Okonkwo**	**D. Marchetti**	**S. Ardley**
Controls contractor	Commissioning engineer	Consultant — M&E	Client
Sedgewray	*R.Okonkwo*	*D.Marchetti*	*S.Ardley*
21/07/26	21/07/26	21/07/26	18/08/26

APPENDIX B3

Report of thorough examination

Lifting Operations and Lifting Equipment Regulations 1998, regulation 9. Made by a competent person independent of the operator and of the maintenance function.

REPORT NO.	BW/TE/26/4471	DATE OF EXAMINATION	17/08/26
EXAMINED FOR	Marlhollow Leisure Ltd, Kettlemoor Park	LOCATION	Area 04, Cinderstone Mine
COMPETENT PERSON	L. Brightwell, engineer surveyor	EXAMINATION TYPE	First examination after installation, with test

ITEM	IDENTIFICATION	SWL	EXAMINATION	TEST APPLIED	RESULT	NEXT DUE · SAMPLE
Socketed davit	CIN-LFT-04051 AM-5502	250 kg	Visual, dimensional, socket and pin; NDT of the socket weld	375 kg (1.5 ×)	No permanent deformation. Safe to use.	17/08/27 12 months
Chain sling, 1 leg	CIN-LFT-04052 AM-5502-A	2 t	Visual; identification tag legible; no stretch, nick or heat damage	Certificate verified	Safe to use.	**17/02/27** 6 months
Bow shackle	CIN-LFT-04052 AM-5502-A	2 t	Visual; body and pin marked and matched; no distortion	Certificate verified	Safe to use.	**17/02/27** 6 months

Defects found which are or could become a danger to persons	None.
Repair, renewal or alteration required	None.
Is the equipment safe to operate?	**Yes.**
Particulars of any test	Davit proof loaded to 375 kg for 10 minutes at maximum radius. Deflection recovered fully on removal of load.

The two accessories are on a six-month interval, not twelve. Under LOLER, lifting accessories require thorough examination every 6 months, while other lifting equipment — the davit itself — is 12-monthly, or to a written scheme of examination where one has been drawn up. Putting the whole set on the davit's annual date is the commonest way an installation like this falls out of compliance, and it does so silently. **The interval runs from the date of examination, not from the date this report was issued or received.**

EXAMINED BY	QUALIFICATION	REPORT ISSUED	RECEIVED BY
L. Brightwell Competent person *L.Brightwell* 17/08/26	**Engineer surveyor** Independent of operator Ref BW/ES/2211	**18/08/26** To the duty holder	**S. Ardley** Client, Head of Operations *S.Ardley* 18/08/26

APPENDIX B4

Reaction to fire — classification summary

Classifications to BS EN 13501-1:2018 for every material in the guest-visible envelope. Test reports held by the client; the summary is bound here because this is the table a fire risk assessor asks for and the one that goes missing.

MATERIAL / SYSTEM	LOCATION	CLASSIFICATION	TEST REPORT	BASIS AND LIMITATION · SAMPLE
FRP cladding, pigmented, on steel	Head frame, full height, guest-facing	B-s1,d0	RTF/26/1180	Classified as the complete system, cladding plus coating, on the substrate as installed.
Scenic timber facing, FR-treated	Plinth, below 1.2 m	B-s1,d0	RTF/26/1181	Treatment is process-applied, not surface-applied. Cutting exposes untreated core — seal cut edges.
Coating system over FRP	Guest-facing	Classified with substrate	RTF/26/1180	The classification belongs to the system, not to the colour. A visual match in a different system needs its own evidence.
Dummy ore skips, FRP over steel	On the belt, guest-visible	B-s1,d0	RTF/26/1182	As installed, including fixings.
Rope dressing, natural fibre	Drum, decorative only	C-s1,d0	RTF/26/1183	**Lower class than everything around it.** Accepted on quantity and position within the venue fire strategy — see the note.

The rope dressing is the line to read twice. It is a C, not a B, and it was accepted on the basis of how much of it there is and where it sits — which means **adding more of it, extending it, or moving it is a change to the venue's fire strategy, not a like-for-like replacement.** Nothing in this appendix is a substitute for the venue's own fire risk assessment. It is an input to it.

B4.1 Repairs and making good

Any repair to the guest-visible envelope must be made in the same classified system, from the same manufacturer, and the system used must be written into the maintenance record — see §7.5 and Appendix E. A colour match made in a different system can be indistinguishable to the eye and a different Euroclass on paper. That is discovered, if at all, at the next fire risk assessment, by which time nobody remembers what was used.

COMPILED BY	TEST REPORTS HELD BY	REVIEWED	ISSUED TO
Hobfolk Compliance desk From the test house reports *Hobfolk* 03/09/26	**Marlhollow Leisure Ltd** Originals, client file	**D. Marchetti** Consultant — M&E *D.Marchetti* 03/09/26	**Venue fire safety manager** For the fire risk assessment

APPENDIX C

Safety data sheets

Every substance used on this element in maintenance, in the 16-section format. Attached, not referenced — a register that points at a data sheet somebody else holds is the single commonest reason a COSHH section is sent back.

REFERENCE	PRODUCT	USED FOR · SAMPLE
SDS/HV/4410	Halverton scale inhibitor HV-40	Reservoir dosing
SDS/HV/4418	Halverton descaler HV-9 (acidic)	Quarterly descale
SDS/TR/2207	Trellworth EP grease NLGI 2	Lubrication L1–L4

The descaler and the inhibitor must never be mixed. One is acidic and one is alkaline-buffered. They are stored in the same cupboard because they are used on the same unit, which is exactly why the warning is on the container, on the schedule at §8.4, and here.

APPENDIX C · SAFETY DATA SHEET

Halverton scale inhibitor HV-40

SDS REFERENCE	SDS/HV/4410	REVISION	4, 02/26
SUPPLIER	Halverton Coatings (Midlands)	FORMAT	16-section, CLP

§	SECTION	CONTENT · SAMPLE
1	Identification of the substance and of the supplier	Halverton scale inhibitor HV-40. Water-treatment additive for atomising and misting systems. Supplier: Halverton Coatings (Midlands). Emergency telephone: venue duty manager, then NHS 111.
2	Hazards identification	Causes serious eye irritation (H319). Not classified for skin sensitisation. Not flammable. Precautionary: P280 wear eye protection; P305+P351+P338 if in eyes, rinse cautiously with water for several minutes.
3	Composition / information on ingredients	Aqueous solution of phosphonate and polyacrylate scale inhibitors, <10% w/w. No component present above its notification threshold.
4	First aid measures	**Eyes:** rinse with running water 15 min, holding the eyelid open. Seek medical advice if irritation persists. **Skin:** wash with soap and water. **Ingestion:** rinse mouth, do not induce vomiting, seek medical advice.
5	Firefighting measures	Non-flammable. Use any extinguishing medium suitable for the surrounding fire. No hazardous combustion products expected at the concentrations supplied.
6	Accidental release measures	Contain with inert absorbent. Do not allow undiluted product to enter surface water drains. Wash residue to foul drain with the venue's agreement. Spill kit at the work face, not in the van.
7	Handling and storage	Store upright, closed, 5–30 °C, out of direct sun. **Do not store or decant next to the descaler.** Dose at full fill only, never at top-up — see §8.4.
8	Exposure controls / personal protection	No workplace exposure limit assigned. Eye protection when decanting. Nitrile gloves. General ventilation is sufficient.
9	Physical and chemical properties	Clear pale amber liquid. Mild odour. pH 8.2–8.8 as supplied. Density 1.08 g/cm³. Fully miscible with water.
10	Stability and reactivity	Stable under the conditions at §7. **Incompatible with acids — including the HV-9 descaler.** Mixing evolves heat and may release irritant vapour.
11	Toxicological information	Eye: irritant on the basis of component data. Skin: not irritant. No evidence of sensitisation, mutagenicity or reproductive toxicity at the concentrations supplied.
12	Ecological information	Not classified as hazardous to the aquatic environment at the in-use dilution. Do not discharge undiluted product to surface water.
13	Disposal considerations	Dispose of unused product and contaminated packaging through a licensed waste contractor. Do not put into the venue's general waste stream. Rinsed containers may be recycled.
14	Transport information	Not classified as dangerous for transport by road (ADR), sea (IMDG) or air (IATA).
15	Regulatory information	Assessed under GB CLP. No authorisation or restriction applies at the concentrations supplied. A COSHH assessment is required for the use described — see the method statement §7.
16	Other information	Revision 4 supersedes revision 3 (section 10 expanded to name the incompatible descaler explicitly). Full text of H319: causes serious eye irritation.

Section 10 is the one that matters on this element. The inhibitor and the descaler live in the same cupboard because they serve the same unit. The incompatibility is named in the data sheet, on the container, and in the maintenance schedule, because being right in one of those three places is not enough.

APPENDIX C · SAFETY DATA SHEET

Halverton descaler HV-9 (acidic)

SDS REFERENCE	SDS/HV/4418	REVISION	6, 05/26
SUPPLIER	Halverton Coatings (Midlands)	FORMAT	16-section, CLP

§	SECTION	CONTENT · SAMPLE
1	Identification of the substance and of the supplier	Halverton descaler HV-9. Acidic descaling solution for heated elements and nozzles. Supplier: Halverton Coatings (Midlands). Emergency telephone: venue duty manager, then NHS 111.
2	Hazards identification	**Causes severe skin burns and eye damage (H314).** May be corrosive to metals (H290). Precautionary: P280 wear protective gloves, eye and face protection; P303+P361+P353 if on skin, remove contaminated clothing and rinse; P305+P351+P338 if in eyes; P310 immediately call a poison centre or doctor.
3	Composition / information on ingredients	Aqueous solution of sulphamic acid 10–20% w/w with a non-ionic wetting agent.
4	First aid measures	**Eyes:** rinse immediately with running water for at least 15 minutes, holding the eyelid open. **Get medical attention immediately. Skin:** remove contaminated clothing, rinse 15 min, seek medical attention. **Inhalation:** move to fresh air. **Ingestion:** rinse mouth, do NOT induce vomiting, seek medical attention immediately.
5	Firefighting measures	Non-flammable. Contact with metals may generate hydrogen. Use water spray, foam or dry powder on a surrounding fire. Wear self-contained breathing apparatus.
6	Accidental release measures	Ventilate. Wear full PPE per §8. Contain with inert absorbent — not sawdust. Neutralise cautiously with sodium bicarbonate before collection. Do not allow to enter drains undiluted.
7	Handling and storage	Store upright, closed, cool, ventilated, away from metals and alkalis. **Never store, decant or mix next to the HV-40 inhibitor.** Use only with the element electrically isolated AND thermally cooled — 20 minutes, §10.2.
8	Exposure controls / personal protection	Nitrile gloves, chemical splash goggles AND a face shield. Chemical-resistant apron. **Eyewash station at the work face, not in the plant room.** Local exhaust or forced ventilation in the plant void.
9	Physical and chemical properties	Clear colourless liquid. Sharp acidic odour. pH <1 as supplied. Density 1.11 g/cm³. Miscible with water — always add acid to water, never water to acid.
10	Stability and reactivity	Stable under the conditions at §7. **Reacts vigorously with alkalis, including the HV-40 inhibitor.** Attacks mild steel, galvanised surfaces, aluminium and copper. Evolves hydrogen on metal contact.
11	Toxicological information	Corrosive to skin and eyes on the basis of pH and component data. Inhalation of mist may cause respiratory irritation. No evidence of sensitisation or carcinogenicity.
12	Ecological information	Harmful to aquatic life at low pH. Neutralise before any discharge. Do not discharge to surface water under any circumstances.
13	Disposal considerations	Neutralise, then dispose through a licensed waste contractor. Contaminated absorbent is hazardous waste. Do not put into the venue's general waste stream.
14	Transport information	UN 3264, Corrosive liquid, acidic, inorganic, n.o.s., Class 8, PG III. Limited quantity provisions may apply to the pack size supplied.
15	Regulatory information	Assessed under GB CLP. A COSHH assessment is required. Not subject to authorisation or restriction at the concentration supplied.
16	Other information	Revision 6 supersedes revision 5 (section 8 amended to require a face shield in addition to goggles, following a reported splash incident elsewhere). Full text of H314: causes severe skin burns and eye damage. H290: may be corrosive to metals.

This is the most hazardous substance on the element and it is used four times a year. Two controls in section 8 are commonly skipped and are called out again in the manual: the face shield in addition to goggles, and an eyewash at the work face rather than in the plant room. A quarterly task is exactly the frequency at which a control gets quietly dropped.

APPENDIX C · SAFETY DATA SHEET

Trellworth EP grease NLGI 2

SDS REFERENCE	SDS/TR/2207	REVISION	2, 11/25
SUPPLIER	Trellworth, via Hobfolk	FORMAT	16-section, CLP

§	SECTION	CONTENT · SAMPLE
1	Identification of the substance and of the supplier	Trellworth lithium-complex extreme-pressure grease, NLGI grade 2. Bearing lubricant. Supplier: Trellworth, via Hobfolk.
2	Hazards identification	Not classified as hazardous under GB CLP. Repeated or prolonged skin contact may cause dryness or dermatitis. High-pressure injection injury is a recognised hazard where grease guns are used.
3	Composition / information on ingredients	Highly refined mineral base oil (IP 346 DMSO extract <3%) with a lithium-complex thickener and EP additives.
4	First aid measures	**Skin:** wipe off, wash with soap and water. **Eyes:** rinse with water. **High-pressure injection:** a puncture from a grease gun is a surgical emergency even if the wound looks trivial — go to A&E immediately and take this sheet.
5	Firefighting measures	Combustible but not flammable. Use dry powder, foam or CO_2. Do not use a water jet. Combustion produces carbon oxides and dense smoke.
6	Accidental release measures	Scrape up mechanically. Absorb residue with inert granules. Grease on a walkway is a slip hazard — clean and degrease the surface before reopening.
7	Handling and storage	Store below 40 °C, closed, away from oxidising agents. Keep cartridge nozzles capped to exclude grit; a contaminated cartridge shortens bearing life more than a missed service.
8	Exposure controls / personal protection	No workplace exposure limit assigned. Nitrile gloves. Eye protection when using a powered gun. Wash hands before eating.
9	Physical and chemical properties	Smooth amber grease. NLGI 2. Dropping point >260 °C. Base oil viscosity 100 mm^2/s at 40 °C. Not water-soluble.
10	Stability and reactivity	Stable. Incompatible with strong oxidising agents. **Do not mix with a grease of a different thickener type** — the mixture can soften and run out of the bearing.
11	Toxicological information	Low acute toxicity by all routes. Prolonged contact may defat the skin.
12	Ecological information	Not readily biodegradable. Do not allow to enter drains or watercourses.
13	Disposal considerations	Used grease and contaminated absorbent to a licensed waste contractor as oily waste.
14	Transport information	Not classified as dangerous for transport.
15	Regulatory information	Not classified under GB CLP. A COSHH assessment is not required for this product, though one is still required for the task where other substances are present.
16	Other information	Revision 2 supersedes revision 1 (section 4 expanded on high-pressure injection injury). Quantities and points are at §7.2 of the manual.

The injection-injury note in section 4 is not boilerplate. Points L1 to L4 are greased with a powered gun four times a year. A grease-gun puncture presents as a pinprick and is a surgical emergency; the reason it is repeated here is that the person doing the quarterly lubrication is often the least experienced person on the shift.

APPENDIX D

Warranties and guarantees

Signed and stamped by both manufacturer and vendor, with the period running from the take-over certificate rather than from delivery. That distinction was worth three months on this job, and it is the single line most often got wrong.

COVERED	WARRANTOR	START	TERM	EXPIRES	CONDITIONS AND EXCLUSIONS · SAMPLE
Geared motors M1 and M2	Trellworth, countersigned Hobfolk	18/08/26	24 mo	18/08/28	Excludes wear parts and any damage arising from a raised overload trip setting. Conditional on the §7.1 schedule being evidenced.
Control panel and safety circuit	Sedgewray Controls Ltd	18/08/26	24 mo	18/08/28	**Void on any circuit altered by others.** Includes the PL d determination only while the parts are as supplied.
Atomiser and reservoir	Vasmoor, countersigned Hobfolk	18/08/26	12 mo	18/08/27	**Excludes scale damage where the quarterly descale is not evidenced.** The §7.1 log is the evidence.
Fabrication, cladding and finishes	Hobfolk	18/08/26	12 mo	18/08/27	Excludes impact damage and any repair not made in the classified coating system (Appendix B4, E).
Davit and lifting accessories	Ardmoss	18/08/26	12 mo	18/08/27	Void on use beyond SWL, or on a missed thorough examination (Appendix B3).

Three of these five are void without a maintenance record. The atomiser warranty is the live one: it is voided by scale, scale is prevented by the quarterly descale, and the only thing that will ever establish the descale happened is the §7.1 log. **The log is the claim.** A client who keeps the equipment perfectly and the paperwork badly has, in warranty terms, kept neither.

D.1 How to make a claim

STEP	ACTION · SAMPLE
1	Stop the element and isolate. Do not attempt a repair — an attempted repair by others voids every warranty in the table above.
2	Photograph the failure in place, before anything is dismantled.
3	Print the §7.1 maintenance log for the preceding 12 months. This is asked for first, every time.
4	Notify the warrantor in writing within 7 days, quoting the asset ID and serial from §2.3.
5	Retain the failed component. A component that has been scrapped cannot be adjudicated and the claim fails on that alone.

COMPILED BY	ORIGINALS HELD BY	TAKE-OVER CERTIFICATE	ACCEPTED
Hobfolk Compliance desk From the original certificates *Hobfolk* 03/09/26	**Marlhollow Leisure Ltd** Signed and stamped, client file	**KM4120-TOC-04-0001** Dated 18/08/26	**S. Ardley** Client, Head of Operations *S.Ardley* 18/08/26

APPENDIX E

Coating technical data

The paint system as applied, in the order it was applied, with the figures a decorator needs three years from now. The classification at Appendix B4 belongs to this system as a whole — not to any one coat and not to the colour.

#	PRODUCT	TYPE	DFT	OVERCOAT	THINNER	NOTES · SAMPLE
1	Halverton Bond WB-11	Waterborne bonding primer	40 µm	4 h min, 30 d max	Water, 5% max	On FRP only. Do not apply below 8 °C or above 85% RH.
2	Halverton Zinc EP-52	Two-pack epoxy zinc phosphate	75 µm	16 h min, 14 d max	HV-T4, 10% max	On steel only. Pot life 4 h at 20 °C. **Sensitiser — SDS in Appendix C is for the water treatment only; obtain the coating SDS before use.**
3	Halverton Textura FT	Textured build coat	300 µm	24 h min	Do not thin	Applied by hopper gun. This is the coat that carries the scenic texture.
4	Halverton Ultraspec EXT	Acrylic colour coat	2 × 45 µm	6 h min	Water, 5% max	Colour to the approved scenic sample, held by the venue. **Colour reference is not recorded here deliberately — the physical sample governs.**
5	Halverton Clear MC	Matt clear protective	30 µm	—	Do not thin	Sacrificial. This is the coat that is renewed, not the colour coat.

E.1 Touch-up and repair

DAMAGE	PROCEDURE	RECORD · SAMPLE
Clear coat only, no colour loss	Clean, key lightly, re-apply coat 5.	Log the date and the product.
Through to colour coat	Feather back, re-apply coats 4 and 5.	Log; match against the venue's physical sample, not a colour code.
Through to substrate, FRP	Fill, sand, then coats 1, 3, 4, 5 in sequence.	Log the full system used — this repair changes the reaction-to-fire evidence if any product is substituted.
Through to substrate, steel	Abrade to bright metal, then coats 2, 3, 4, 5.	As above. Do not leave bare steel overnight.

Coat 5 is sacrificial and coat 4 is not. The single most useful thing on this page is that a scuffed element usually needs the clear coat renewed and nothing else. Repainting the colour coat because the clear coat has dulled is how a scenic finish drifts away from its approved sample over about four years, one well-meant repair at a time.

Stocked locally. Halverton Coatings (Midlands) holds coats 1, 4 and 5 and the touch-up kit CIN-SP-04106, two weeks' lead. Coats 2 and 3 are made to order at six weeks. That is why the touch-up kit is on the spares list at §11.2 and the build coat is not.

APPENDIX F

Health and safety signage

The signs fitted to this element and its enclosure, and where each one is. Bound in so that a damaged sign is replaced with the right shape and the right colour rather than the nearest thing in the stores.

Eye protection
Descaling point

Head protection
Gates A and B

Foot protection
Gates A, B and C

Hand protection
Descaler store

Harness at height
Upper drum housing

No unauthorised entry
All gates, outward

No smoking
Enclosure, plant void

Danger, electricity
Panel; all isolators

Hot surface
Atomiser hatch, 96 °C

Entanglement
Drum and conveyor guards

Overhead load
Davit, during a lift

Emergency exit
Escape to walkway

First aid
Area 04 maint. office

Fire extinguisher
Plant void; entry

F.1 Shape and colour, and why it is not a style choice

CATEGORY	SHAPE AND COLOUR	MEANS · SAMPLE
Mandatory	White on a blue disc	You must do this. Not advisory.
Prohibition	Black on white, red circle and bar	You must not do this.
Warning	Black on a yellow triangle	A hazard is present. Take precautions.
Safe condition	White on a green square	Escape route, first aid, safety facility.
Fire equipment	White on a red square	Location of firefighting equipment.

A sign in the wrong colour is not a smaller version of the right sign. Shape and colour carry the meaning before anyone is close enough to read the pictogram, and in the dark or in steam they may be all that is legible. Replacements are bought to the standard, not matched by eye to what is on the wall.

Scope of this plate. These pictograms are an index of what is fitted, drawn for this manual. They are not a reproduction of any published pictogram set and are not artwork for manufacture. Signage is procured to the current standard from a supplier who certifies to it.

THE POINT OF THE EXERCISE

This is what we mean by “written through the job”.

Everything above is invented. The discipline is not.

What makes a pack hold up

- It says **which regime applies and which does not**, with the reason. An unstated exclusion reads as an omission — and a wrong standard number is worse than none.
- It contains **evidence, not assurance**. Measured values, on dated tests, by named people — including the test that failed.
- Every inspection line has a **failure route**. A check with nowhere to go when it fails is a check nobody acts on.
- Deviations are recorded **on the day**, with the reason. That is the part nobody can reconstruct later.
- Numbers, not adjectives: torques, intervals, tolerances, lead times, currents.
- Residual risk is addressed **to a stranger in ten years**, which is what CDM information is actually for.
- It names what will be **unobtainable** before it is.

How this one was produced

- Written against a **standard that is itself written down** — the content requirements of HSG175 Appendix 3, and the information duty in CDM 2015.
- **Every citation verified** against the issuing body before use: edition, amendment and current status. That is why BS EN 13814 appears here as a three-part 2019 standard amended in 2024, and why BS 7671 is named with the amendment in force at the date of test.
- **Checked against the standard automatically**, line by line, before a person saw it.
- Then handed to **a second desk with no stake in the answer** to try to fault.
- **A person read it** before it went anywhere.
- The standards behind it were designed with practising O&M, health-and-safety and compliance specialists, and they check the work.

This is a sample. Cinderstone Mine does not exist. Kettlemoor Park, Marlhollow Leisure Ltd, and every supplier, consultant and person named in this document are fictitious. Every element code, drawing number, document number, serial number, colour reference, part reference and test result was invented for this sample. **No content from any real project appears anywhere in it.** The regulations, standards and guidance cited are real and were verified current at 3 September 2026; the application of them here is to a project that does not exist, and this document is not advice on yours.

Hobfolk — the overnight back office for companies that make things. The Compliance desk writes method statements, RAMS, ITPs, submittals, O&M manuals and handover packs against your job, while the job is still running.

hobfolk.com · hello@hobfolk.com · A division of Farwinger Limited, registered in England 16047814